FCC 47 CFR PART 15 SUBPART C

Product Type	:	Bluetooth Module
Applicant	:	First Chair Acoustics Co., Ltd.
Address	:	No. 53, Lane 17, Yuhe St., Taoyuan City, Taoyuan County, Taiwan, R.O.C.
Trade Name	:	First Chair Acoustics
Model Number	:	FCABTC30
Test Specification	:	FCC 47 CFR PART 15 SUBPART C: Oct., 2013 Canada RSS-210 ISSUE 8: Dec., 2010 Canada RSS-Gen ISSUE 3: Dec., 2010 ANSI C63.4:2009
Receive Date	:	Sep. 25, 2014
Test Period	:	Sep. 26 ~ Sep. 29, 2014
Issue Date	:	Oct. 09, 2014

Issue by

A Test Lab Techno Corp.
No. 140-1, Changan Street, Bade City,
Taoyuan County 334, Taiwan R.O.C.
Tel：+886-3-2710188 / Fax：+886-3-2710190

Taiwan Accreditation Foundation accreditation number: 1330

Note: *This report shall not be reproduced except in full, without the written approval of A Test Lab Techno Corp. This document may be altered or revised by A Test Lab Techno Corp. personnel only, and shall be noted in the revision section of the document. The client should not use it to claim product endorsement by TAF, or any government agencies. The test results in the report only apply to the tested sample.*

Revision History

Rev.	Issue Date	Revisions	Revised By
00	Oct. 09, 2014	Initial Issue	

Verification of Compliance

Issued Date: 10/09/2014

Product Type	:	Bluetooth Module
Applicant	:	First Chair Acoustics Co., Ltd.
Address	:	No. 53, Lane 17, Yuhe St., Taoyuan City, Taoyuan County, Taiwan, R.O.C.
Trade Name	:	First Chair Acoustics
Model Number	:	FCABTC30
FCC ID	:	2ADA3FCABT30
EUT Rated Voltage	:	DC 3.3V
Test Voltage	:	120 Vac / 60 Hz
Applicable Standard	:	FCC 47 CFR PART 15 SUBPART C: Oct., 2013 Canada RSS-210 ISSUE 8: Dec., 2010 Canada RSS-Gen ISSUE 3: Dec., 2010 ANSI C63.4:2009
Test Result	:	Complied
Performing Lab.	:	A Test Lab Techno Corp. No. 140-1, Changan Street, Bade City, Taoyuan County 334, Taiwan R.O.C. Tel：+886-3-2710188 / Fax：+886-3-2710190 Taiwan Accreditation Foundation accreditation number: 1330 http://www.atl-lab.com.tw/e-index.htm

The above equipment was tested by A Test Lab Techno Corp. The test data, data evaluation, test procedures, and equipment configurations shown in this report were made in accordance with the procedures given in ANSI C63.4: 2009 and the energy emitted by the sample tested as described in this report is in compliance with the requirements of FCC Rules Part 15.207, 15.209, 15.247 .

The test results of this report relate only to the tested sample identified in this report.

Approved By	: Fly Lu	Reviewed By	: Eric Ou Yang
(Manager)	(Fly Lu)	(Testing Engineer)	(Eric Ou Yang)

TABLE OF CONTENTS

1 General Information 6
2 EUT Description 7
3 Test Methodology 8
3.1. Mode of Operation 8
3.2. EUT Exercise Software 8
3.3. Configuration of Test System Details 9
3.4. Test Site Environment 9
4 Radiated Emission Measurement 10
4.1. Limit 10
4.2. Test Instruments 10
4.3. Setup 11
4.4. Test Procedure 12
4.5. Test Result 14
5 Maximum Conducted Output Power Measurement 17
5.1. Limit 17
5.2. Test Setup 17
5.3. Test Instruments 17
5.4. Test Procedure 17
5.5. Test Result 18
6 6dB RF Bandwidth and 99 % Occupied Bandwidth Measurement 19
6.1. Limit 19
6.2. Test Setup 19
6.3. Test Instruments 19
6.4. Test Procedure 19
6.5. Test Result 20
6.6. Test Graphs 21
7 Maximum Power Density Measurement 22
7.1. Limit 22
7.2. Test Setup 22
7.3. Test Instruments 22
7.4. Test Procedure 22
7.5. Test Result 23
7.6. Test Graphs 24

8 Out of Band Conducted Emissions Measurement 25
8.1. Limit 25
8.2. Test Setup 25
8.3. Test Instruments 25
8.4. Test Procedure 25
8.5. Test Graphs 26
9 Band Edges Measurement 29
9.1. Limit 29
9.2. Test Setup 29
9.3. Test Instruments 29
9.4. Test Procedure 30
9.5. Test Result 31
10 Antenna Measurement 32
10.1. Limit 32
10.2. Antenna Connector Construction 32

1 General Information

1.1 Summary of Test Result

Standard		Item	Result	Remark
15.247	RSS-GEN			
15.207	7.2.2	AC Power Conducted Emission	N/A	The device use DC power source.
-----	6	Receiver Radiated Emissions	PASS	-----
-----	4.6.1	99 % Occupied Bandwidth	PASS	-----
Standard		Item	Result	Remark
15.247	RSS-210			
15.247(d)	A8.5	Transmitter Radiated Emissions	PASS	-----
15.247(b)(3)	A8.4	Max. Output Power	PASS	-----
15.247(a)(2)	A8.2 (a)	6dB RF Bandwidth	PASS	-----
15.247(e)	A8.2 (b)	Power Spectral Density	PASS	-----
15.247(d)	A8.5	Out of Band Conducted Spurious Emission	PASS	-----
15.247(d)	A8.5	Band Edge Measurement	PASS	-----
15.203	-	Antenna Requirement	PASS	-----

The test results of this report relate only to the tested sample(s) identified in this report. Manufacturer or whom it may concern should recognize the pass or fail of the test result.

1.2 Measurement Uncertainty

Test Item	Frequency Range		Uncertainty (dB)
Conducted Emission	9kHz ~ 30MHz		± 2.02
Radiated Emission	30MHz ~ 1000MHz	Horizontal	± 3.98
		Vertical	± 3.62
	1000MHz ~ 18000MHz	Horizontal	± 3.11
		Vertical	± 3.07
	18000MHz ~ 40000MHz	Horizontal	± 3.66
		Vertical	± 3.54

2 EUT Description

Product Type	Bluetooth Module
Trade Name	First Chair Acoustics
Model No.	FCABTC30
Applicant	First Chair Acoustics Co., Ltd. No. 53, Lane 17, Yuhe St., Taoyuan City, Taoyuan County, Taiwan, R.O.C.
Manufacturer	First Chair Acoustics Co., Ltd. No. 53, Lane 17, Yuhe St., Taoyuan City, Taoyuan County, Taiwan, R.O.C.
FCC ID	2ADA3FCABT30
Frequency Range	Bluetooth v4.0 LE: 2402 ~ 2480 MHz
Modulation Type	GFSK
Antenna Type	Print PCB Antenna
Antenna Gain	4.75 dBi
RF Output Power	0.00029 W / -5.38 dBm
99 % Occupied Bandwidth	1.06 MHz
Emission Designator	1M06F1D

3 Test Methodology

3.1. Mode of Operation

Decision of Test ATL has verified the construction and function in typical operation. All the test modes were carried out with the EUT in normal operation, which was shown in this test report and defined as:

Test Mode
Mode 1: Normal Operation Mode
Mode 2: Bluetooth v4.0 LE Link Mode
Mode 3: Receiver Mode

Software used to control the EUT for staying in continuous transmitting mode was programmed.

After verification, all tests were carried out with the worst case test modes as shown below except radiated spurious emission below 1GHz and power line conducted emissions below 30MHz, which worst case was in normal link mode only.

By preliminary testing and verifying three axis (X, Y and Z) position of EUT transmitted status, it was found that “X axis” position was the worst, then the final test was executed the worst condition and test data were recorded in this report.

3.2. EUT Exercise Software

1.	Setup the EUT shown on 3.3.
2.	Turn on the power of all equipment.
3.	Turn on Wi-Fi function link to AP.
4.	EUT run test program.
5	Turn Bluetooth function link to CBT.

3.3. Configuration of Test System Details

Radiated Emissions

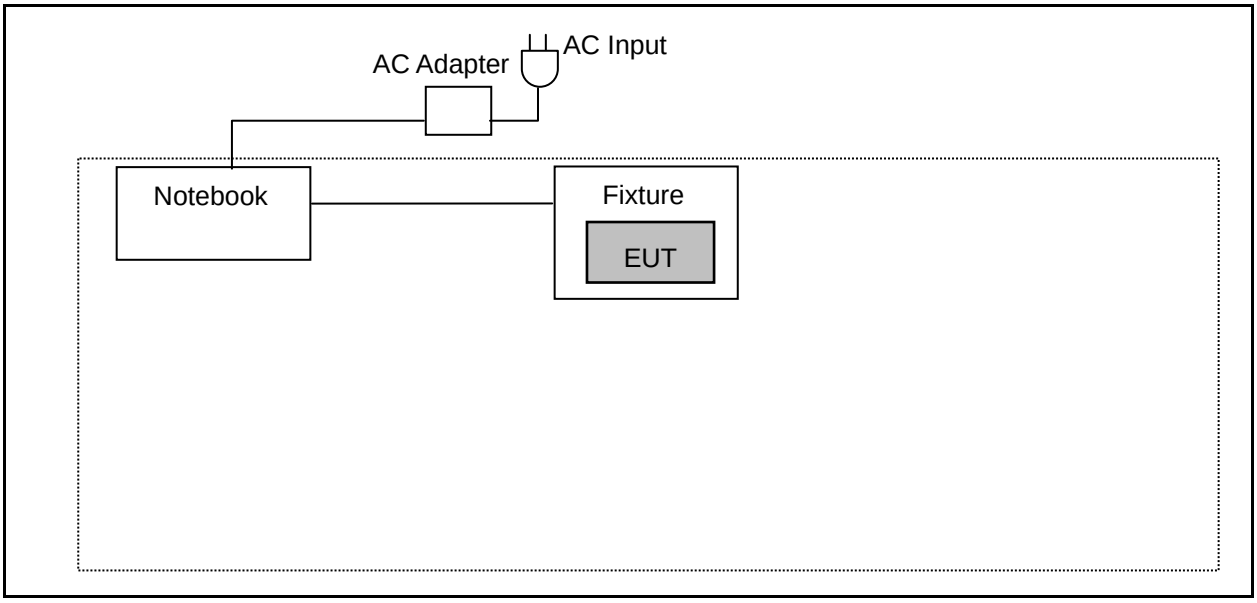

3.4. Test Site Environment

Items	Required (IEC 60068-1)	Actual
Temperature (°C)	15-35	26
Humidity (%RH)	25-75	60
Barometric pressure (mbar)	860-1060	950

4 Radiated Emission Measurement

4.1. Limit

According to §15.209(a), except as provided elsewhere in this subpart, the emissions from an intentional radiator shall not exceed the field strength levels specified in the following table:

Frequency (MHz)	Field Strength (μV/m at meter)	Measurement Distance (meters)
0.009 – 0.490	2400 / F (kHz)	300
0.490 – 1.705	24000 / F (kHz)	30
1.705 – 30.0	30	30
30 - 88	100**	3
88-216	150**	3
216-960	200**	3
Above 960	500	3

** Except as provided in paragraph (g), fundamental emissions from intentional radiators operating under this Section shall not be located in the frequency bands 54-72 MHz, 76-88 MHz, 174-216 MHz or 470-806 MHz. However, operation within these frequency bands is permitted under other sections of this Part, e.g., Sections 15.231 and 15.241.

4.2. Test Instruments

3 Meter Chamber					
Equipment	Manufacturer	Model Number	Serial Number	Cal. Date	Remark
RF Pre-selector	Agilent	N9039A	MY46520256	01/10/2014	(1)
Spectrum Analyzer	Agilent	E4446A	MY46180578	01/10/2014	(1)
Pre Amplifier	Agilent	8449B	3008A02237	02/21/2014	(1)
Pre Amplifier	Agilent	8447D	2944A10961	02/21/2014	(1)
Broadband Antenna (30MHz~1GHz)	SCHWARZBECK MESS-ELEKTRONIK	VULB9163	9163-270	07/22/2014	(1)
Horn Antenna (1~18GHz)	SCHWARZBECK MESS-ELEKTRONIK	BBHA9120D	9120D-550	06/11/2014	(1)
Horn Antenna (18~40GHz)	SCHWARZBECK MESS-ELEKTRONIK	BBHA9170	9170-320	07/02/2014	(1)
Loop Antenna	COM-POWER CORPORATION	AL-130	121014	01/28/2014	(3)
Test Site	ATL	TE01	888001	08/28/2014	(1)

Remark: (1) Calibration period 1 year. (2) Calibration period 2 years. (3) Calibration period 3 years.
Note: N.C.R. = No Calibration Request.

4.3. Setup

Below 1GHz

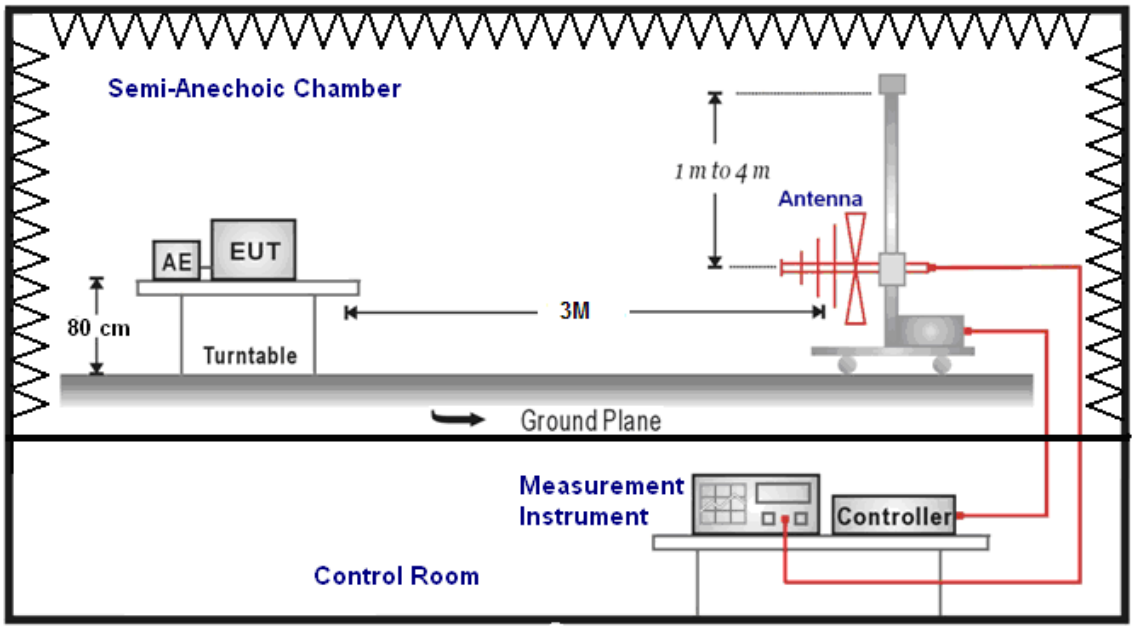

Above 1GHz

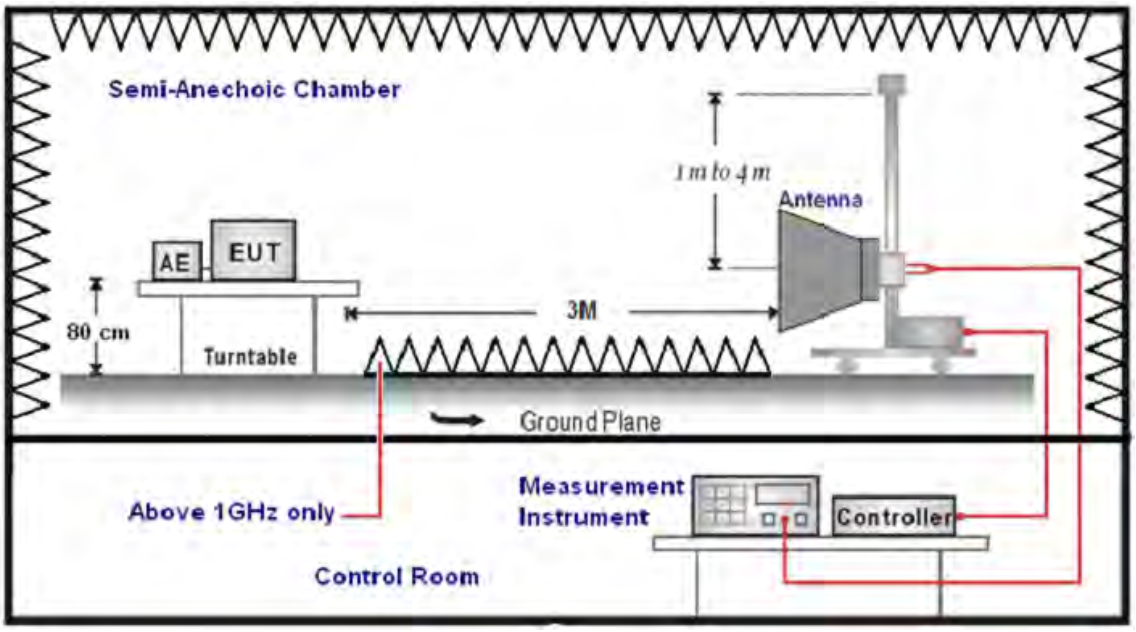

4.4. Test Procedure

Final radiation measurements were made on a three-meter, Semi Anechoic Chamber. The EUT system was placed on a nonconductive turntable which is 0.8 meters height, top surface 1.0 x 1.5 meter. The spectrum was examined from 250 MHz to 2.5 GHz in order to cover the whole spectrum below 10th harmonic which could generate from the EUT. During the test, EUT was set to transmit continuously & Measurements spectrum range from 9 kHz to 26.5 GHz is investigated.

For measurements below 1 GHz the resolution bandwidth is set to 100 kHz for peak detection measurements or 120 kHz for quasi-peak detection measurements. Peak detection is used unless otherwise noted as quasi-peak.

For measurements above 1 GHz the resolution bandwidth is set to 1 MHz, and then the video bandwidth is set to 1 MHz for peak measurements and 10 Hz for average measurements.

A nonconductive material surrounded the EUT to supporting the EUT for standing on tree orthogonal planes. At each condition, the EUT was rotated 360 degrees, and the antenna was raised and lowered from one to four meters to find the maximum emission levels. Measurements were taken using both horizontal and vertical antenna polarization.

SCHWARZBECK MESS-ELEKTRONIK Biconilog Antenna (mode VULB9163) at 3 Meter and the SCHWARZBECK Double Ridged Guide Antenna (model BBHA9120D&9170) was used in frequencies 1 – 26.5 GHz at a distance of 1 meter. All test results were extrapolated to equivalent signal at 3 meters utilizing an inverse linear distance extrapolation Factor (20dB/decade).

For testing above 1GHz, the emission level of the EUT in peak mode was 20dB lower than average limit (that means the emission level in peak mode also complies with the limit in average mode), then testing will be stopped and peak values of EUT will be reported, otherwise, the emissions will be measured in average mode again and reported.

Appropriate preamplifiers were used for improving sensitivity and precautions were taken to avoid overloading or desensitizing the spectrum analyzer. No post – detector video filters were used in the test.

The spectrum analyzer's 6 dB bandwidth was set to 1 MHz, and the analyzer was operated in the peak detection mode, for frequencies both below and up 1 GHz. The average levels were obtained by subtracting the duty cycle correction factor from the peak readings.

The following procedures were used to convert the emission levels measured in decibels referenced to 1 microvolt (dBuV) into field intensity in micro volts pre meter (uV/m).

The actual field intensity in decibels referenced to 1 microvolt in to field intensity in micro colts per meter (dBuV/m).

The actual field is intensity in referenced to 1 microvolt per meter (dBuV/m) is determined by algebraically adding the measured reading in dBuV, the antenna factor (dB), and cable loss (dB) and Subtracting the gain of preamplifier (dB) is auto calculate in spectrum analyzer.

(1) Amplitude (dBuV/m) = FI (dBuV) +AF (dBuV) +CL (dBuV)-Gain (dB)
FI= Reading of the field intensity.
AF= Antenna factor.
CL= Cable loss.
P.S Amplitude is auto calculate in spectrum analyzer.

(2) Actual Amplitude (dBuV/m) = Amplitude (dBuV)-Dis(dB)
The FCC specified emission limits were calculated according the EUT operating frequency and by following linear interpolation equations:
(a) For fundamental frequency : Transmitter Output < +30dBm
(b) For spurious frequency : Spurious emission limits = fundamental emission limit /10

Data of measurement within this frequency range without mark in the table above means the reading of emissions are attenuated more than 20dB below the permissible limits or the field strength is too small to be measured.

4.5. Test Result

Below 1GHz

Standard:	FCC Part 15C	Test Distance:	3m
Test item:	Radiated Emission	Power:	AC 120V/60Hz
Model Number:	FCABTC30	Temp.(℃)/Hum.(%RH):	26(℃)/60%RH
Mode:	1	Date:	09/26/2014
		Test By:	Eric Ou Yang

Frequency (MHz)	Reading (dBuV)	Correct Factor (dB/m)	Result (dBuV/m)	Limit (dBuV/m)	Margin (dB)	Remark	Ant.Polar. H / V
140.0000	47.28	-12.26	35.02	43.50	-8.48	QP	H
233.5000	51.72	-12.95	38.77	46.00	-7.23	QP	H
295.0000	48.76	-10.38	38.38	46.00	-7.62	QP	H
381.0000	47.59	-8.63	38.96	46.00	-7.04	QP	H
418.0000	47.18	-7.81	39.37	46.00	-6.63	QP	H
665.0000	38.21	-3.01	35.20	46.00	-10.80	QP	H
123.0000	49.82	-14.06	35.76	43.50	-7.74	QP	V
246.0000	50.67	-12.23	38.44	46.00	-7.56	QP	V
319.5000	48.50	-9.93	38.57	46.00	-7.43	QP	V
418.0000	46.15	-7.81	38.34	46.00	-7.66	QP	V
504.0000	44.89	-6.21	38.68	46.00	-7.32	QP	V
666.5000	39.22	-2.99	36.23	46.00	-9.77	QP	V

Note: No emission found between lowest internal used/generated frequency to 30MHz (9kH~30MHz).

Above 1GHz

Standard:	FCC Part 15C	Test Distance:	3m
Test item:	Radiated Emission	Power:	AC 120V/60Hz
Model Number:	FCABTC30	Temp.(℃)/Hum.(%RH):	26(℃)/60%RH
Mode:	2	Date:	09/26/2014
Frequency:	2402MHz	Test By:	Eric Ou Yang

Frequency (MHz)	Reading (dBuV)	Correct Factor (dB/m)	Result (dBuV/m)	Limit (dBuV/m)	Margin (dB)	Remark	Ant.Polar. H / V
3037.000	36.27	-0.10	36.17	74.00	-37.83	peak	H
4577.000	33.56	4.39	37.95	74.00	-36.05	peak	H
7206.000	40.59	11.35	51.94	74.00	-22.06	peak	H
3037.000	36.63	-0.10	36.53	74.00	-37.47	peak	V
4577.000	34.50	4.39	38.89	74.00	-35.11	peak	V
7206.000	40.51	11.35	51.86	74.00	-22.14	peak	V

Standard:	FCC Part 15C	Test Distance:	3m
Test item:	Radiated Emission	Power:	AC 120V/60Hz
Model Number:	FCABTC30	Temp.(℃)/Hum.(%RH):	26(℃)/60%RH
Mode:	2	Date:	09/26/2014
Frequency:	2440MHz	Test By:	Eric Ou Yang

Frequency (MHz)	Reading (dBuV)	Correct Factor (dB/m)	Result (dBuV/m)	Limit (dBuV/m)	Margin (dB)	Remark	Ant.Polar. H / V
3037.000	36.76	-0.10	36.66	74.00	-37.34	peak	H
4880.000	41.78	5.17	46.95	74.00	-27.05	peak	H
7320.000	46.45	11.62	58.07	74.00	-15.93	peak	H
7320.000	35.02	11.62	46.64	54.00	-7.36	AVG	H
3058.000	36.36	-0.04	36.32	74.00	-37.68	peak	V
4880.000	41.75	5.17	46.92	74.00	-27.08	peak	V
7320.000	40.35	11.62	51.97	74.00	-22.03	peak	V

Standard:	FCC Part 15C	Test Distance:	3m
Test item:	Radiated Emission	Power:	AC 120V/60Hz
Model Number:	FCABTC30	Temp.(℃)/Hum.(%RH):	26(℃)/60%RH
Mode:	2	Date:	09/26/2014
Frequency:	2480MHz	Test By:	Eric Ou Yang

Frequency (MHz)	Reading (dBuV)	Correct Factor (dB/m)	Result (dBuV/m)	Limit (dBuV/m)	Margin (dB)	Remark	Ant.Polar. H / V
3051.000	37.12	-0.06	37.06	74.00	-36.94	peak	H
4960.000	45.10	5.38	50.48	74.00	-23.52	peak	H
7440.000	46.57	11.92	58.49	74.00	-15.51	peak	H
7440.000	31.22	11.92	43.14	54.00	-10.86	peak	H
3051.000	36.59	-0.06	36.53	74.00	-37.47	peak	V
4960.000	46.29	5.38	51.67	74.00	-22.33	peak	V
7440.000	45.44	11.92	57.36	74.00	-16.64	peak	V
7440.000	31.77	11.92	43.69	54.00	-10.31	AVG	V

Standard:	RSS-Gen	Test Distance:	3m
Test item:	Radiated Emission	Power:	AC 120V/60Hz
Model Number:	FCABTC30	Temp.(℃)/Hum.(%RH):	26(℃)/60%RH
Mode:	3	Date:	09/26/2014
Frequency:	2440MHz	Test By:	Eric Ou Yang

Frequency (MHz)	Reading (dBuV)	Correct Factor (dB/m)	Result (dBuV/	Peak (dBuV/m)	AVG. (dBuV/m)	Margin (dB)	Remark	Ant.Polar. H / V
3051.000	37.77	-0.06	37.71	74.00	54.00	-36.29	peak	H
4598.000	34.03	4.45	38.48	74.00	54.00	-35.52	peak	H
6698.000	33.39	10.03	43.42	74.00	54.00	-30.58	peak	H
3058.000	37.89	-0.04	37.85	74.00	54.00	-36.15	peak	V
4605.000	34.09	4.47	38.56	74.00	54.00	-35.44	peak	V
6670.000	33.85	9.95	43.80	74.00	54.00	-30.20	peak	V

5 Maximum Conducted Output Power Measurement

5.1. Limit

For systems using digital modulation in the 2400-2483.5MHz, the limit for peak output power is 30dBm.

5.2. Test Setup

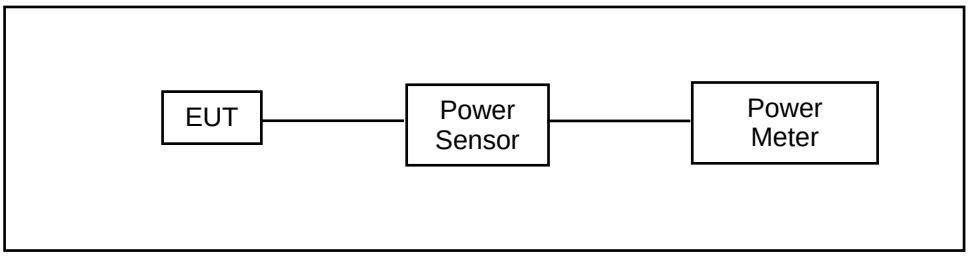

5.3. Test Instruments

Equipment	Manufacturer	Model Number	Serial Number	Cal. Date	Remark
Single Channel PK Power Sensor	Agilent	N1911A	MY45101619	12/21/2013	(1)
Wideband Power Meter	Agilent	N1921A	MY45241957	12/21/2013	(1)
Test Site	ATL	TE05	TE05	N.C.R.	-----

Remark: (1) Calibration period 1 year. (2) Calibration period 2 years. (3) Calibration period 3 years.
Note: N.C.R. = No Calibration Request.

5.4. Test Procedure

The tests below are run with the EUT's transmitter set at high power in TX mode. The EUT is needed to force selection of output power level and channel number. While testing, EUT was set to transmit continuously. Remove the Subjective device's antenna and connect the RF output port to power sensor. The maximum peak output power shall not exceed 1 watt.

Use a direct connection between the antenna port of transmitter and the power sensor, for prevent the power sensor input attenuation 40-50 dB. Set the RBW Bandwidth of the emission or use a channel power meter mode.

For antennas with gains of 6 dBi or less, maximum allowed transmitter output is 1 watt (+30 dBm). For antennas with gains greater than 6 dBi, transmitter output level must be decreased by an amount equal to (GAIN - 6)/3 dBm.

The antenna port of the EUT was connected to the input of a power sensor. Power was read directly and cable loss correction was added to the reading to obtain power at the EUT antenna terminals.

5.5. Test Result

Model Number	FCABTC30					
Test Item	Maximum Conducted Output Power					
Test Mode	Mode 2: Bluetooth v4.0 LE Link Mode					
Date of Test	09/26/2014			Test Site	TE05	
Frequency (MHz)	Data Rate	Average Power		Peak Power		Limit (dBm)
		(dBm)	(W)	(dBm)	(W)	
2402	---	-8.49	0.00014	-5.41	0.00029	< 30
2440	---	-8.39	0.00014	**-5.38**	**0.00029**	< 30
2480	---	-8.68	0.00014	-5.85	0.00026	< 30

6 6dB RF Bandwidth and 99 % Occupied Bandwidth Measurement

6.1. Limit

6dB RF Bandwidth: Systems using digital modulation techniques may operate in the 2400–2483.5 MHz bands. The minimum 6 dB band-width shall be at least 500 kHz.
99 % Occupied Bandwidth: N/A

6.2. Test Setup

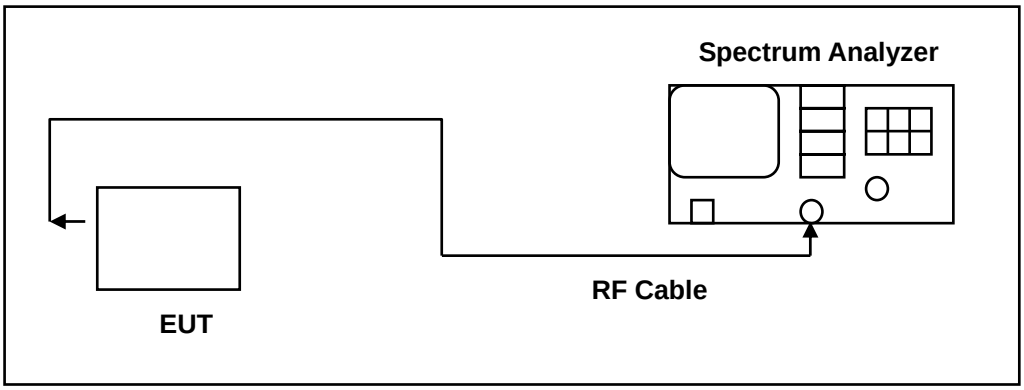

6.3. Test Instruments

Equipment	Manufacturer	Model Number	Serial Number	Cal. Date	Remark
Spectrum Analyzer	Agilent	E4445A	MY45300744	12/19/2012	(2)
Test Site	ATL	TE05	TE05	N.C.R.	-----

dRemark: (1) Calibration period 1 year. (2) Calibration period 2 years. (3) Calibration period 3 years.
Note: N.C.R. = No Calibration Request.

6.4. Test Procedure

The EUT was setup to ANSI C63.4, 2009; tested to DTS test procedure of KDB558074D01 for compliance to FCC 47CFR 15.247 requirements.
6dB RF Bandwidth: The antenna port of the EUT was connected to the input of a spectrum analyzer. Analyzer RES BW was set to 100 kHz. For each RF output channel investigated, the spectrum analyzer center frequency was set to the channel carrier. A peak output reading was taken, a DISPLAY line was drawn 6 dB lower than peak level. The 6 dB bandwidth was determined from where the channel output spectrum intersected the display line.
The test was performed at 3 channels (Channel low, middle, high)
99 % Occupied Bandwidth: The transmitter shall be operated at its maximum carrier power measured under normal test conditions.
The video bandwidth shall be set to 3 times the resolution bandwidth. Video averaging is not permitted. Where practical, a sampling detector shall be used since a peak or, peak hold, may produce a wider bandwidth than actual.
The trace data points are recovered and are directly summed in linear terms. The recovered amplitude data points, beginning at the lowest frequency, are placed in a running sum until 0.5% of the total is reached and that frequency recorded. The process is repeated for the highest frequency data points. This frequency is recorded.

6.5. Test Result

Model Number	FCABTC30			
Test Item	6dB RF Bandwidth & 99 % Occupied Bandwidth			
Test Mode	Mode 2: Bluetooth v4.0 LE Link Mode			
Date of Test	09/26/2014		Test Site	TE05
Frequency (MHz)	6dB Bandwidth (kHz)	99% Occupied Bandwidth (MHz)	Limit (kHz)	
2402	750.954	1.0610	> 500	
2440	750.006	1.0604	> 500	
2480	737.312	1.0590	> 500	

6.6. Test Graphs

Mode 2: Bluetooth v4.0 LE Link Mode	
2402	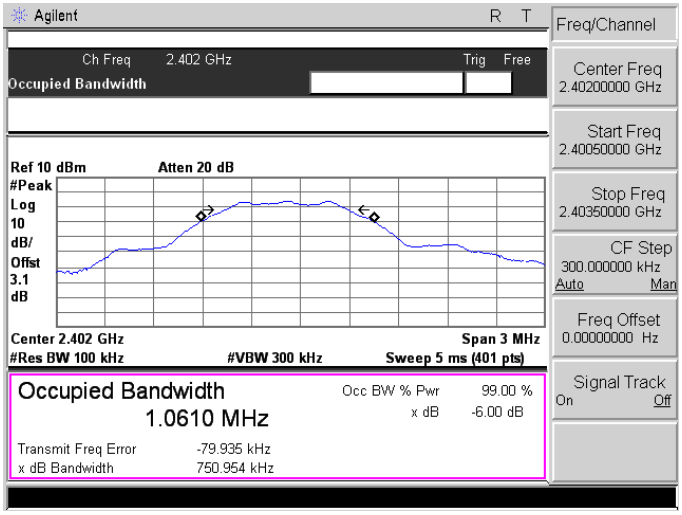
2440	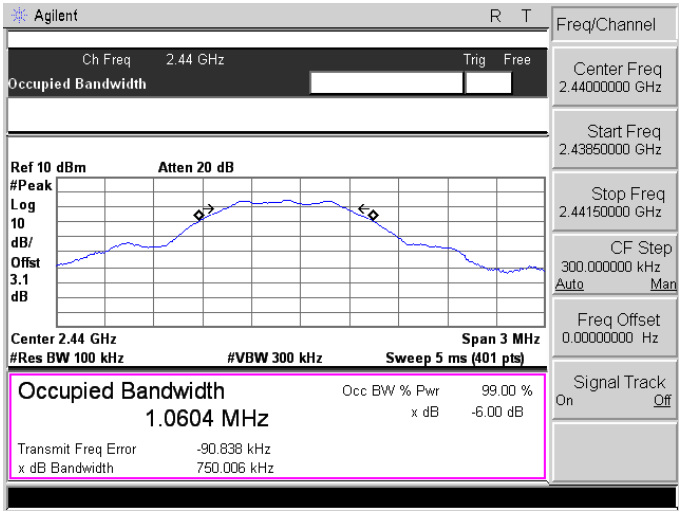
2480	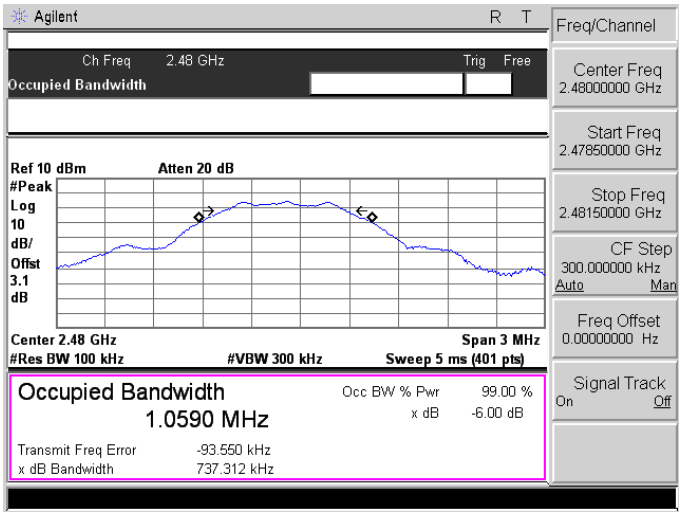

7 Maximum Power Density Measurement

7.1. Limit

For digitally modulated systems, the power spectral density conducted from the intentional radiator to the antenna shall not be greater than 8 dBm in any 3 kHz band during any time interval of continuous transmission.

7.2. Test Setup

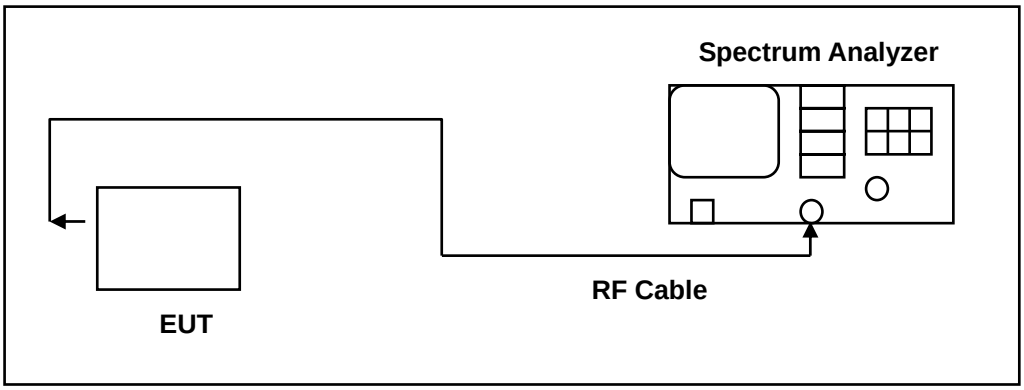

7.3. Test Instruments

Equipment	Manufacturer	Model Number	Serial Number	Cal. Date	Remark
Spectrum Analyzer	Agilent	E4445A	MY45300744	12/19/2012	(2)
Test Site	ATL	TE05	TE05	N.C.R.	-----

Remark: (1) Calibration period 1 year. (2) Calibration period 2 years. (3) Calibration period 3 years.
Note: N.C.R. = No Calibration Request.

7.4. Test Procedure

The EUT was setup to ANSI C63.4, 2009; tested to DTS test procedure of KDB558074D01 for compliance to FCC 47CFR 15.247 requirements.

1. Set analyzer center frequency to DTS channel center frequency.
2. Set the span to 1.5 times the DTS bandwidth.
3. Set the RBW to: 3 kHz ≤ RBW ≤ 100 kHz.
4. Set the VBW ≥ 3 × RBW.
5. Detector = peak.
6. Sweep time = auto couple.
7. Trace mode = max hold.
8. Allow trace to fully stabilize.
9. Use the peak marker function to determine the maximum amplitude level within the RBW.
10. If measured value exceeds limit, reduce RBW (no less than 3 kHz) and repeat.

7.5. Test Result

Model Number	FCABTC30		
Test Item	Maximum Power Density		
Test Mode	Mode 2: Bluetooth v4.0 LE Link Mode		
Date of Test	09/26/2014	Test Site	TE05
Frequency (MHz)	Reading (dBm/3KHz)		Limit (dBm)
2402	-20.71		< 8
2440	-20.26		< 8
2480	-20.46		< 8

7.6. Test Graphs

Mode 2: Bluetooth v4.0 LE Link Mode	
2402	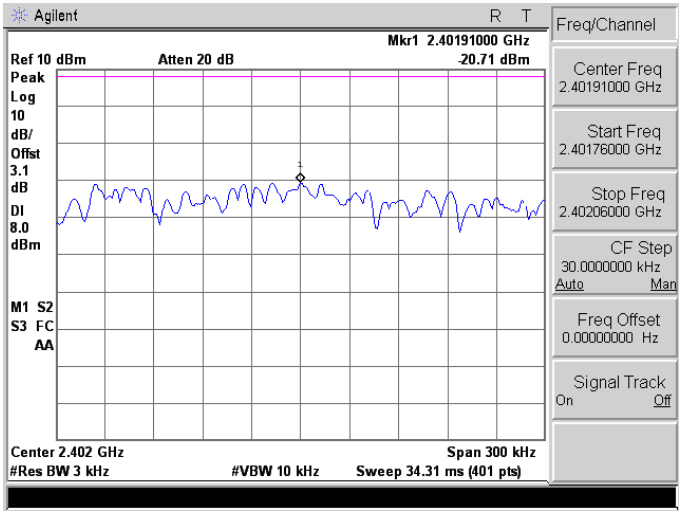
2440	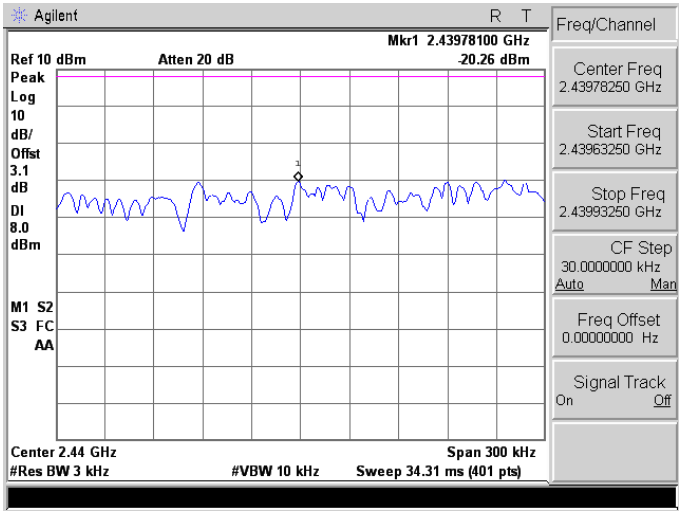
2480	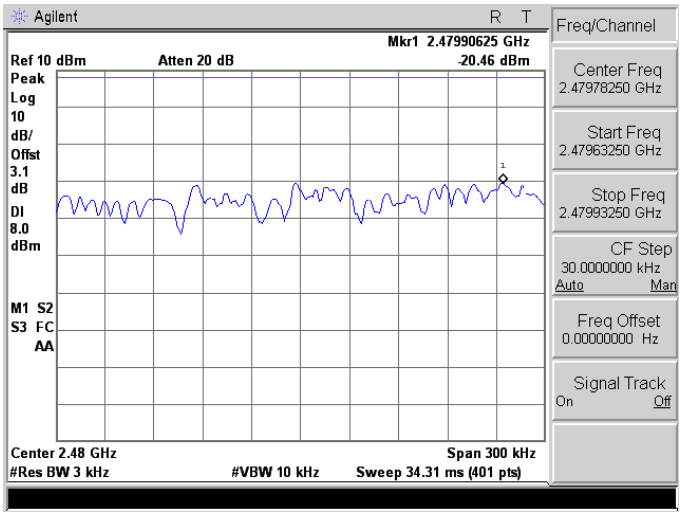

8 Out of Band Conducted Emissions Measurement

8.1. Limit

In any 100 kHz bandwidth outside the frequency band in which the spread spectrum or digitally modulated intentional radiator is operating, the radio frequency power that is produced by the intentional radiator shall be at least 20 dB below that in the 100 kHz bandwidth within the band that contains the highest level of the desired power

8.2. Test Setup

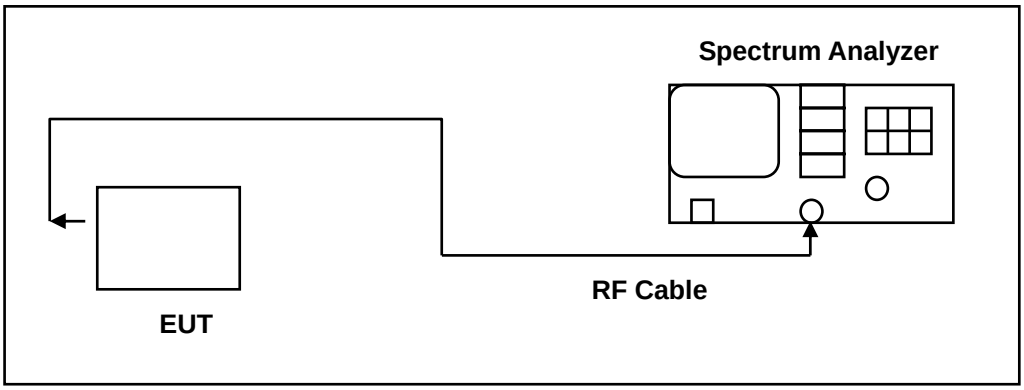

8.3. Test Instruments

Equipment	Manufacturer	Model Number	Serial Number	Cal. Date	Remark
Spectrum Analyzer	Agilent	E4445A	MY45300744	12/19/2012	(2)
Spectrum Analyzer	Agilent	E4408B	MY45107753	07/24/2014	(1)
Test Site	ATL	TE05	TE05	N.C.R.	-----

Remark: (1) Calibration period 1 year. (2) Calibration period 2 years. (3) Calibration period 3 years.
Note: N.C.R. = No Calibration Request.

8.4. Test Procedure

In any 100 kHz bandwidth outside the EUT pass band, the RF power produced by the modulation products of the spreading sequence, the information sequence, and the carrier frequency shall be at least 20 dB below that of the maximum in-band 100 kHz emission, antenna output of the EUT was coupled directly to spectrum analyzer; if an external attenuator and/or cable was used, these losses are compensated for with the analyzer OFFSET function.
All other types of emissions from the EUT shall meet the general limits for radiated frequencies outside the pass band.
The test was performed at 3 channels.

8.5. Test Graphs

Reference level

Mode 2: Bluetooth v4.0 LE Link Mode	
2402	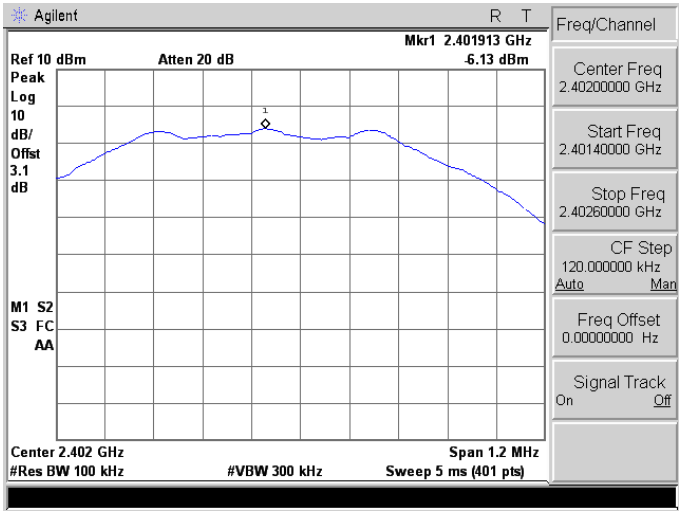
2440	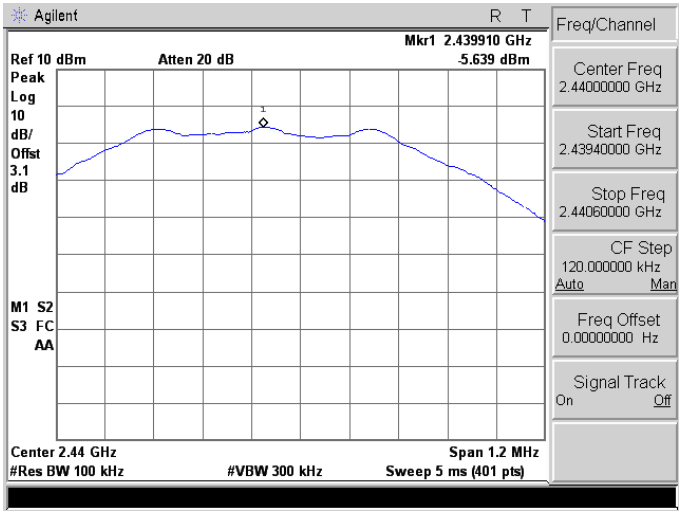
2480	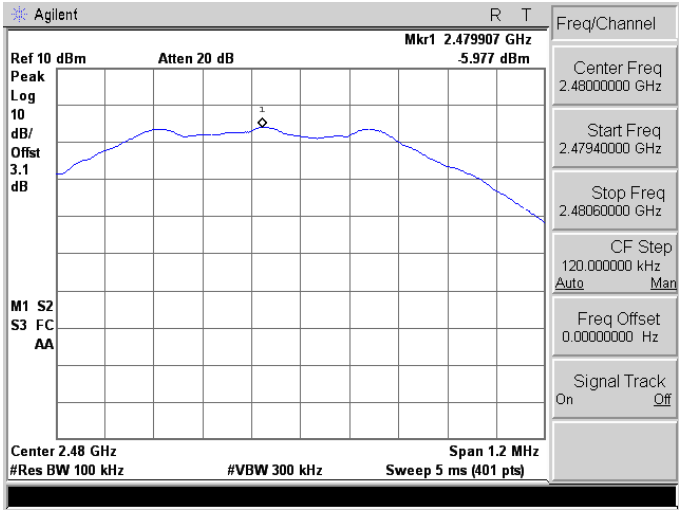

Out of Band Conducted Emissions

Mode 2: Bluetooth v4.0 LE Link Mode	
2402	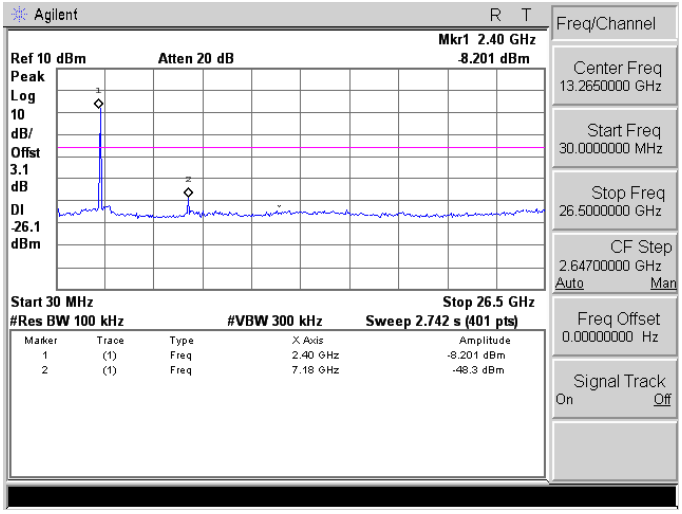
2440	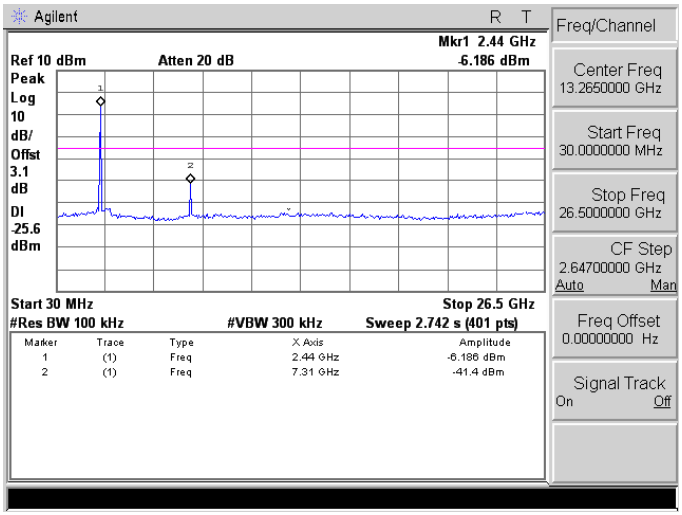
2480	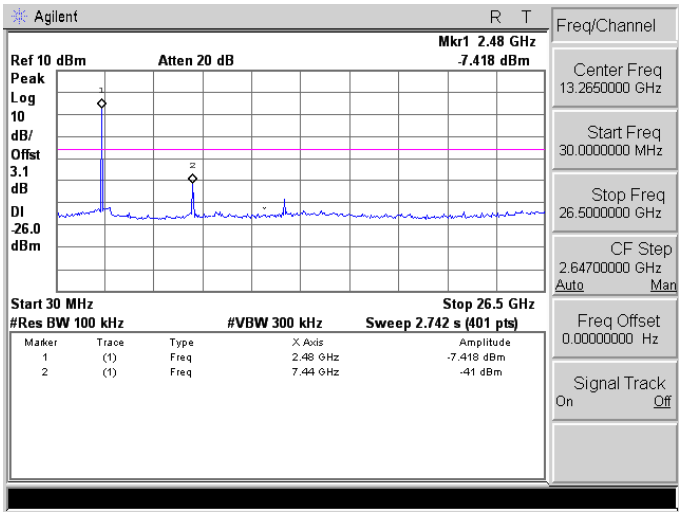

Conducted Band Edge

Mode 2: Bluetooth v4.0 LE Link Mode	
2402	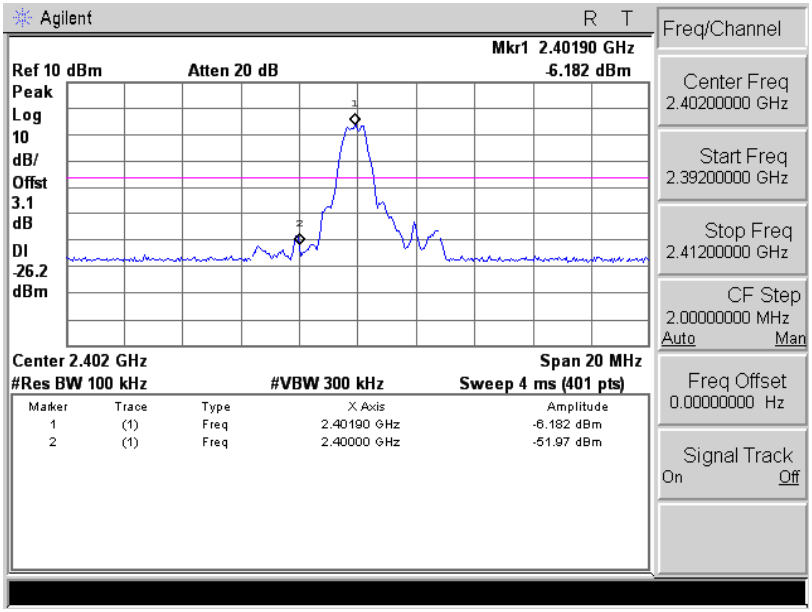
2480	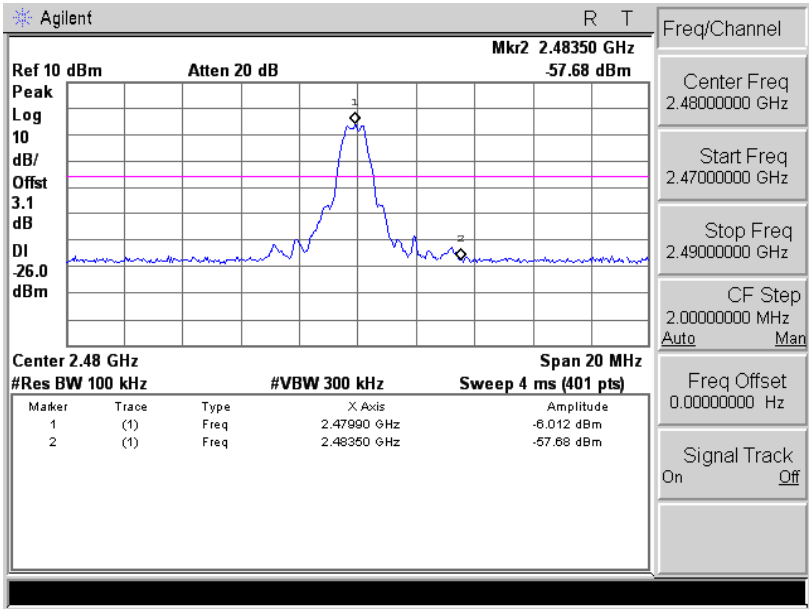

9 Band Edges Measurement

9.1. Limit

In any 100 kHz bandwidth outside the intentional radiation frequency band, the radio frequency power shall be at least 20 dB below the highest level of the radiated power. In addition, radiated emissions which fall in the restricted bands must also comply with the radiated emission limits.

9.2. Test Setup

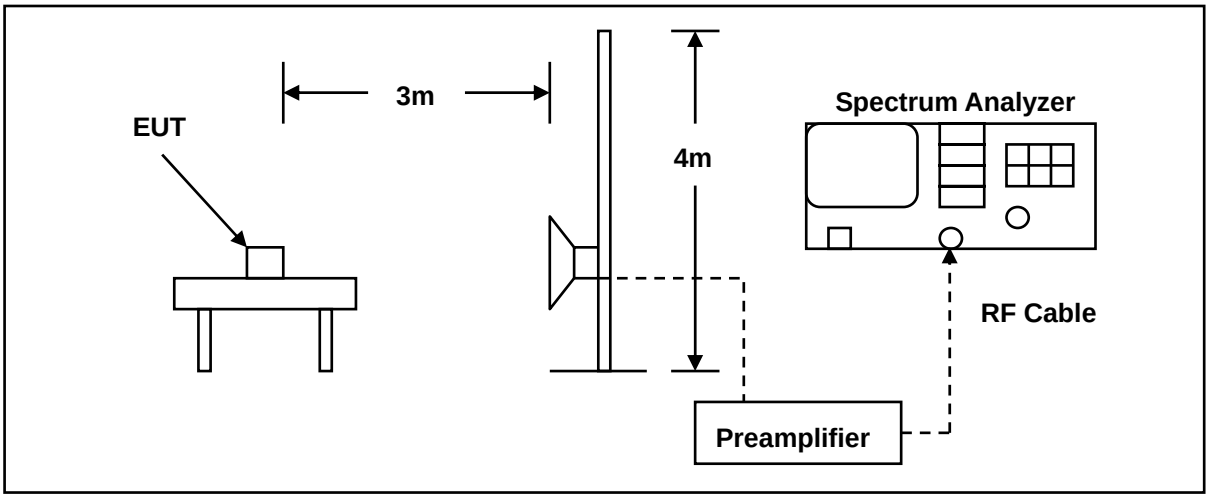

9.3. Test Instruments

3 Meter Chamber					
Equipment	Manufacturer	Model Number	Serial Number	Cal. Date	Remark
RF Pre-selector	Agilent	N9039A	MY46520256	01/10/2014	(2)
Spectrum Analyzer	Agilent	E4446A	MY46180578	01/10/2014	(1)
Pre Amplifier	Agilent	8449B	3008A02237	02/21/2014	(1)
Pre Amplifier	Agilent	8447D	2944A10961	02/21/2014	(1)
Horn Antenna (1~18GHz)	SCHWARZBECK MESS-ELEKTRONIK	BBHA9120D	9120D-550	06/11/2014	(1)
Test Site	ATL	TE01	888001	08/28/2014	(1)

Remark: (1) Calibration period 1 year. (2) Calibration period 2 years. (3) Calibration period 3 years.
Note: N.C.R. = No Calibration Request.

9.4. Test Procedure

The EUT was setup to ANSI C63.4, 2009; tested to DTS test procedure of KDB558074D01 for compliance to FCC 47CFR 15.247 requirements.

The emissions on the harmonics frequencies, the limits, and the margin of compliance are presented. These tests were made when the transmitter was in full radiated power. The additional test was performed to show compliance with the requirement at the band-edge frequency 2483.5 MHz and up to 2500 MHz and at 2390.0 MHz.

The transmitter was configured with the worst case antenna and setup to transmit at the highest channel. Then the field strength was measured at 2483.5 MHz.

The transmitter was then configured with the worst case antenna and setup to transmit at the lowest channel. Then the field strength was measured at 2390.0 MHz. These tests were performed at 4 different bit rates.

For measurements the resolution bandwidth is set to 1 MHz, and then the video bandwidth is set to 1 MHz for peak measurements and 10 Hz for average measurements.

9.5. Test Result

Standard:	FCC Part 15C	Test Distance:	3m
Test item:	Radiated Emission	Power:	AC 120V/60Hz
Model Number:	FCABTC30	Temp.(℃)/Hum.(%RH):	26(℃)/60%RH
Mode:	2	Date:	09/26/2014
Frequency:	2402 MHz	Test By:	Eric Ou Yang

Frequency (MHz)	Reading (dBuV)	Correct Factor (dB/m)	Result (dBuV/m)	Limit (dBuV/m)	Margin (dB)	Remark	Ant.Polar. H / V
2361.260	42.87	-2.07	40.80	74.00	-33.20	peak	H
2390.000	40.35	-1.94	38.41	74.00	-35.59	peak	H
2388.760	43.46	-1.96	41.50	74.00	-32.50	peak	V
2390.000	41.12	-1.94	39.18	74.00	-34.82	peak	V

Standard:	FCC Part 15C	Test Distance:	3m
Test item:	Radiated Emission	Power:	AC 120V/60Hz
Model Number:	FCABTC30	Temp.(℃)/Hum.(%RH):	26(℃)/60%RH
Mode:	2	Date:	09/26/2014
Frequency:	2480 MHz	Test By:	Eric Ou Yang

Frequency (MHz)	Reading (dBuV)	Correct Factor (dB/m)	Result (dBuV/m)	Limit (dBuV/m)	Margin (dB)	Remark	Ant.Polar. H / V
2483.500	37.93	-1.52	36.41	74.00	-37.59	peak	H
2492.860	43.60	-1.47	42.13	74.00	-31.87	peak	H
2483.500	40.80	-1.52	39.28	74.00	-34.72	peak	V
2484.100	42.14	-1.51	40.63	74.00	-33.37	peak	V

10 Antenna Measurement

10.1. Limit

For intentional device, according to 15.203, an intentional radiator shall be designed to ensure that no antenna other than that furnished by the responsible party shall be used with the device.

And According to 15.247 (b), if transmitting antennas of directional gain greater than 6 dBi are used, the power shall be reduced by the amount in dB that the directional gain of the antenna exceeds 6dBi.

10.2. Antenna Connector Construction

The antenna used in this product is Print PCB Antenna. And the maximum Gain of this antenna is 4.75 dBi.