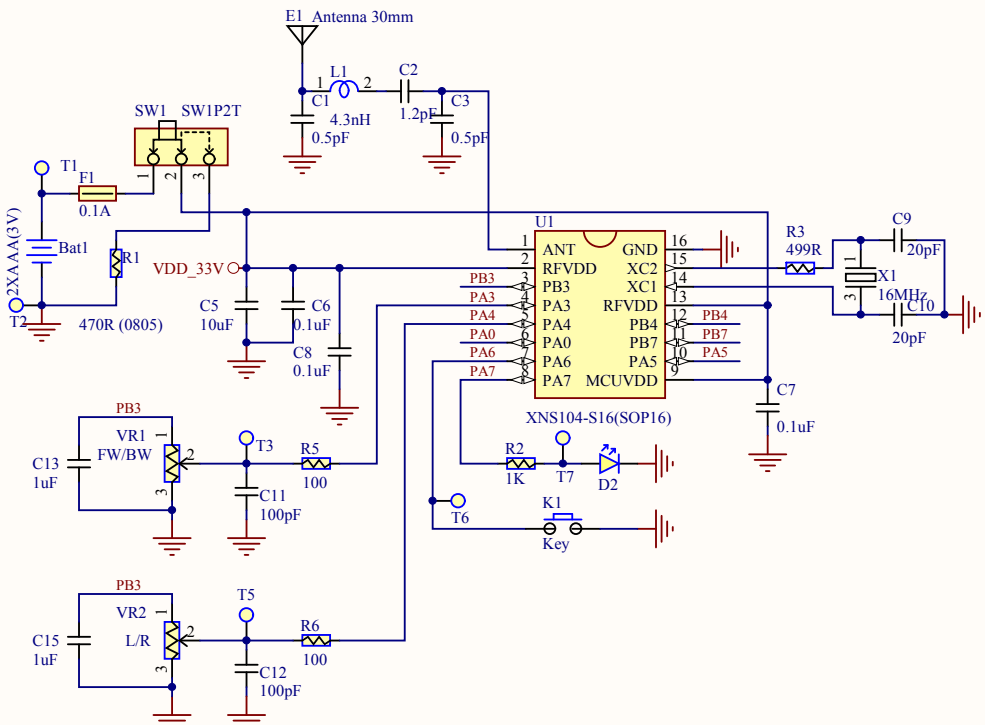

Title		
Size A4	Number	Revision
Date: 2022/12/15	Sheet of	
File: D:\1WS Product\..\Train RemoteV33.SchDoc	Drawn By:	