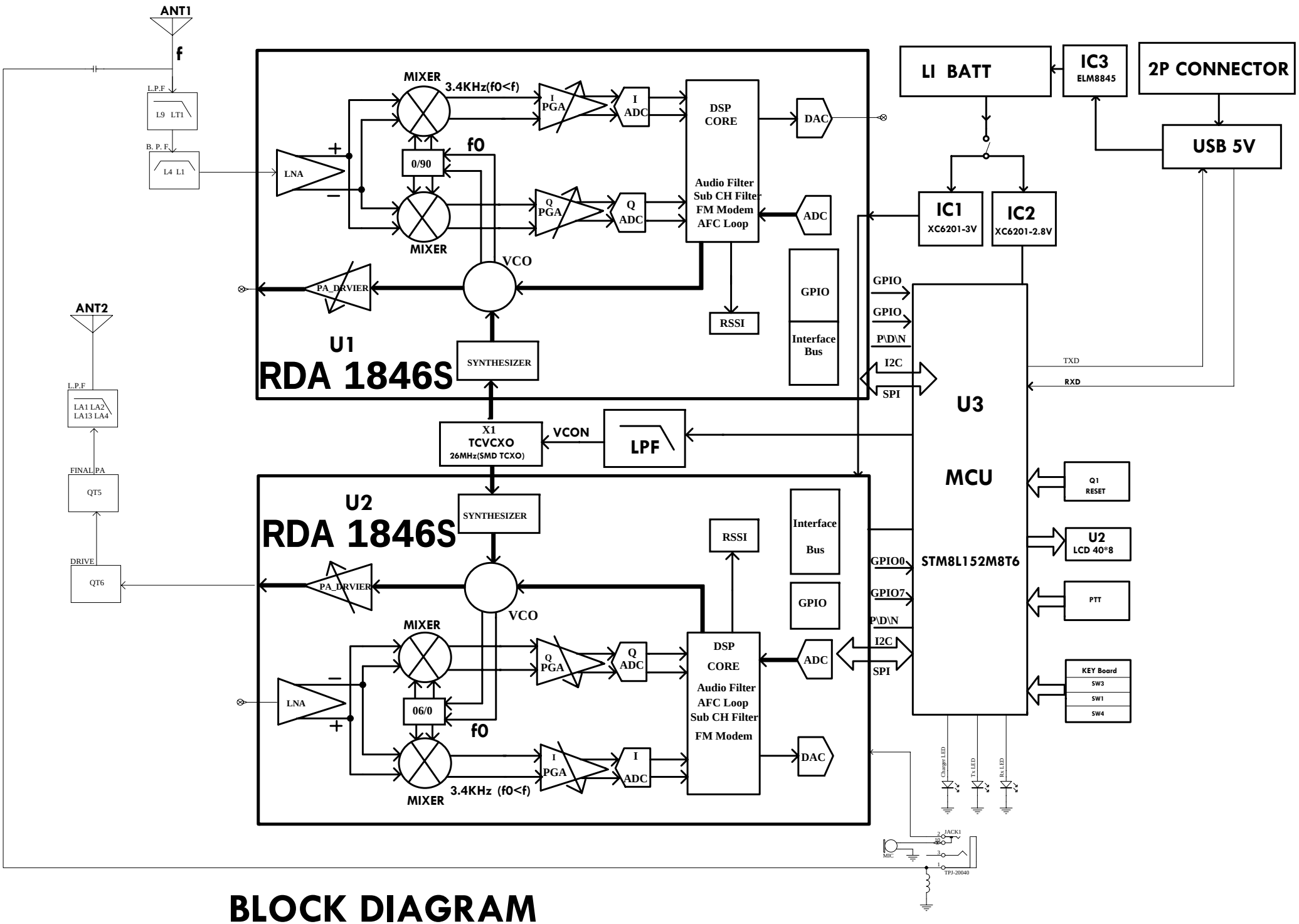

BLOCK DIAGRAM