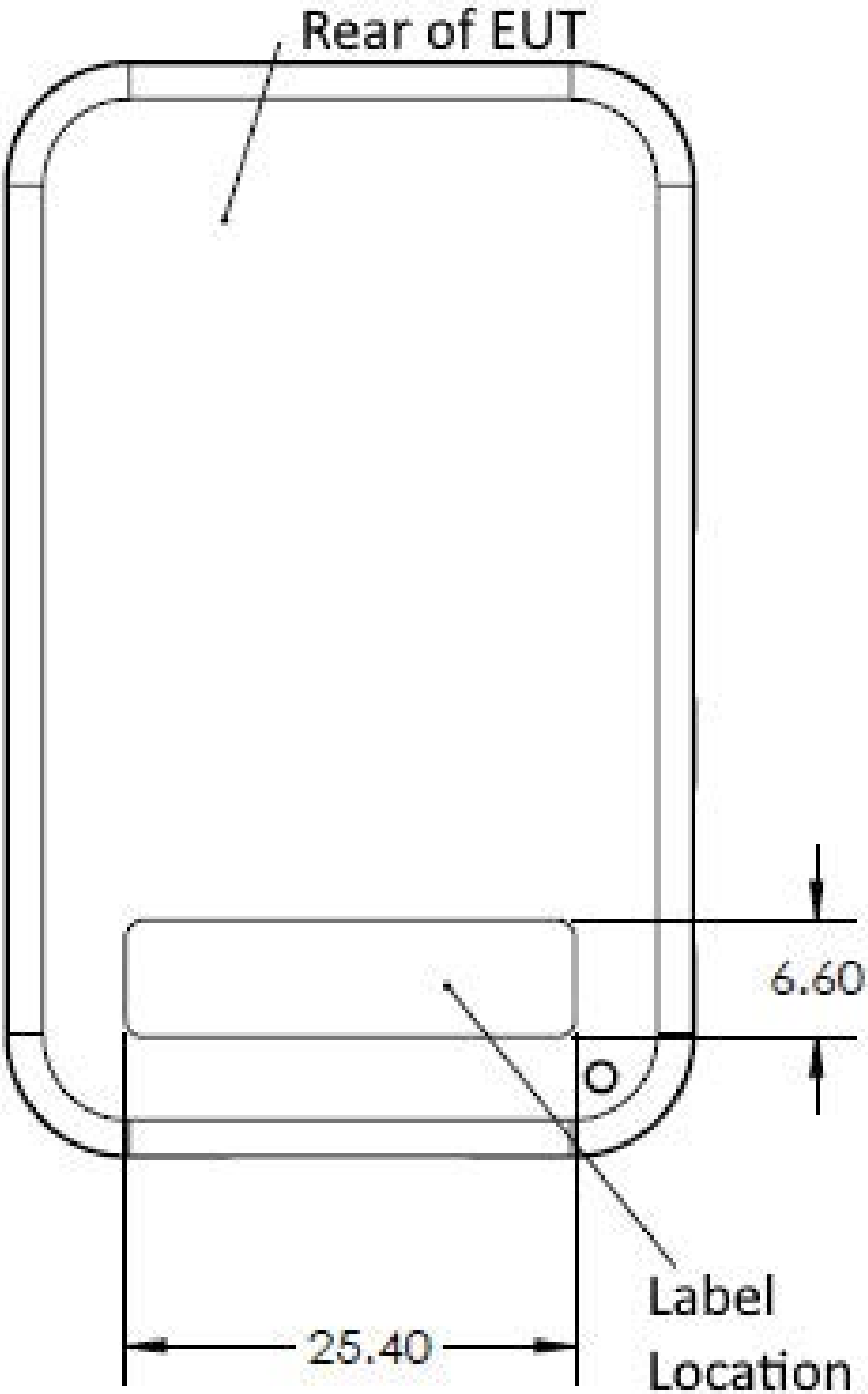
Rear of EUT
6.60
25.40
Label
Location