ITEM #	# PIECE/PART #	DESCRIPTION	QTE/QTY.	MATERIEL/MATERIAL
1	VOIR DEFINITION PRODUIT	COUVERCLE BORNE	1	VALOX 420 BK1066
2	P04120_000	O-RING	1	NITRIL BUNA-N DURO 70A
3	P04993_000	SILICONE GREASE	1	-
4	1001052151_000	PCBA GENERIQUE - VOIR DEFINITION PRODUIT	1	-
5	1000645976_000	BOITIER BORNE	1	VALOX 420 BK1066
6	FQ0017_000	ETIQUETTES 1 X 0,37	2	POLYESTER

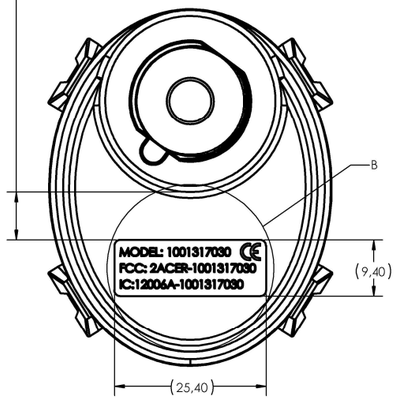

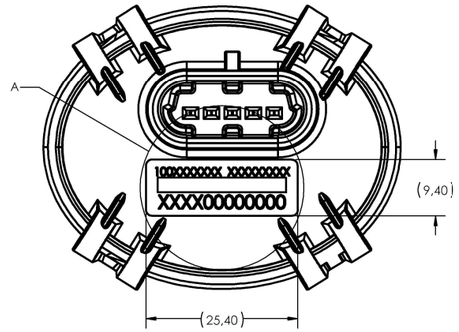

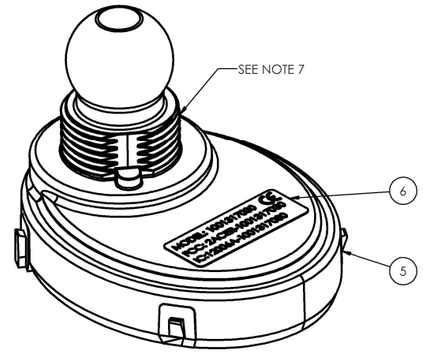

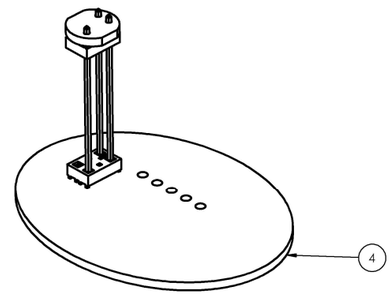

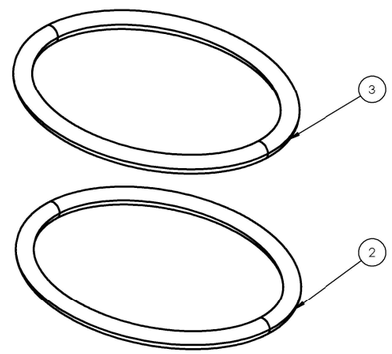

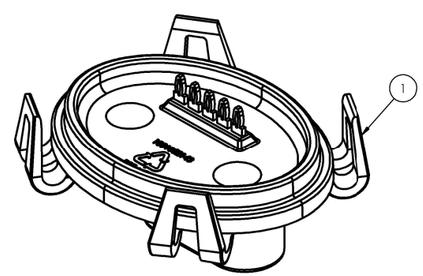

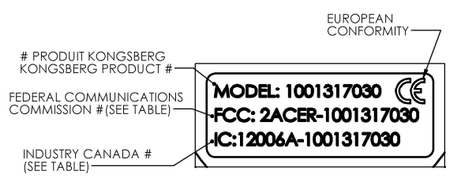

ÉTIQUETTE CERTIFICATION / CERTIFICATION LABEL
DETAIL B
SCALE 3 : 1

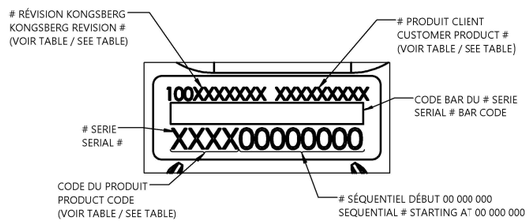

ÉTIQUETTE PRODUIT / PRODUCT LABEL
DETAIL A
SCALE 3 : 1

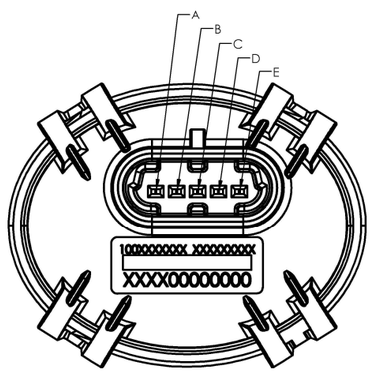

1001316154 / 1001374047

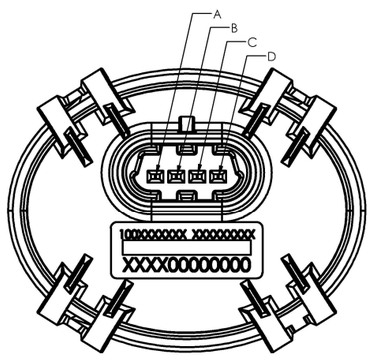

1001316155 / 1001373998

NOTES :

1.CECI EST UN DESSIN DE BASE. TOUTES LES DIMENSIONS NON ILLUSTRÉES PEUVENT ÊTRE EXTRAITE DU FICHER 3D.
THIS IS A LIMITED CONTENT DRAWING. ALL DIMENSIONS NOT SHOWN ARE BASIC TO BE EXTRACTED FROM CAD FILE.

CE DESSIN CORRESPOND AU FICHIER 3D SUIVANT THIS DRAWING CORRESPOND TO THE FOLLOWING 3D FILE		
NOM DE FICHIER FILE NAME	DATE DE CRÉATION DU FICHER FILE CREATION DATE	TAILLE DU FICHIER FILE SIZE
1001316154-01.STEP	2022-08-03 15:20:28	23 674 951 octets
1001374047-01.STEP	2022-08-03 15:22:25	23 674 920 octets
1001316155-01.STEP	2022-08-03 15:24:19	24 000 456 octets
1001373998-01.STEP	2022-08-03 15:26:32	24 000 605 octets

2. TOLÉRANCE GÉNÉRALE / GENERAL TOLERANCE: 0.5

3. CONNECTEUR / CONNECTOR:
COUVERCLE 1000645977 : CONNECTEUR 4 BROCHES DELPHI GT 150
COVER 1000645977: 4 PINS CONNECTOR DELPHI GT 150
CONTACT / PIN-OUT :
A - GND
B - Cut-off
C - ONE WIRE (MOWP)
D - V Bat

4. CONNECTEUR / CONNECTOR:
COUVERCLE 1001052143 : CONNECTEUR 5 BROCHES DELPHI GT 150
COVER 1001052143: 5 PINS CONNECTOR DELPHI GT 150
CONTACT / PIN-OUT :
A - GND
B - Cut off
C - CAN L
D - V bat
E - CAN H

5. L'UTILISATION DE GRAISSE DIELECTRIQUE DANS LE CONNECTEUR EST RECOMMANDÉE.
RECOMMENDED USE OF DIELECTRIC GREASE IN THE CONNECTOR.

6. DESSIN CLÉ RFID GÉNÉRIQUE ASSOCIÉES / ASSOCIATED RFID KEY GENERIC DRAWING.
BRP # 515177661
KA # 1000634541

7. SERRER L'ECROU DE MONTAGE BRP # 278002963 AVEC UN COUPLE DE 2 A 3 Nm.
TIGHTEN THE ASSEMBLY NUT BRP # 27800296 WITH A TORQUE FROM 2 TO 3 Nm.

8. CARACTÉRISTIQUES SIGNIFICATIVES INDIQUÉES PAR SC. / SIGNIFICANT CHARACTERISTICS INDICATED BY SC.

9. TRD ASSOCIÉ / ASSOCIATED TRD # TRD-18-0019 / 1001065928

10. TCD ASSOCIÉ / ASSOCIATED TCD # 1001385887

11. LISTE DES PIÈCES ASSOCIÉES / ASSOCIATED PART LIST # 1001326190

DEFINITION PRODUIT / PRODUCT DEFINITION							
KA ASM #	DESCRIPTION	BRP #	PCBA #	COUVERCLE COVER	CODE PRODUIT PRODUCT CODE	FCC	IC
1001316154-01	RFID GEN3 CAN	710008832	1001317034-02	1001052143	832A	2ACER1001317030	12006A-1001317030
1001316155-01	RFID GEN3 MOWP	515179305	1001317036-01	1000645977	305A		
1001373998-01	RFID GEN3 NO RFID 4 PINS	515179239	1001358519-01	1000645977	239C	PAS D'ETIQUETTE CERTIFICATION NO CERTIFICATION LABEL	
1001374047-01	RFID GEN3 NO RFID 5 PINS	710008635	1001358519-01	1001052143	635B		

TABLEAU DES LOGICIELS / SOFTWARE TABLE				
PAQUET PRODUCTION PRODUCTION PACKAGE	PLM #	DESCRIPTION	NOM DU FICHIER FILE NAME	CRC32
1001377769-01	1001355747-01	BOOTLOADER	1001355747_01_00_BOOT.s19	0xDB4F640E
	1001355750-01	APPLICATION	1001355750_01_00_APPL.s19	0x3A6BC221
	1001377768-01	CALIBRATION	1001377768_01_01_CAL.s19	0xB215

REVISIONS

Phase	Version	ECN number	/ No	Nature of change	Changed by	Changed date
S	01	1001373726		RELACHE INITIALE / INITIAL RELEASE	MARBGMCA	2022-08-16

For this drawing the following standards apply
ASME Y14.5-2009
ALL DIMENSIONS ARE METRIC (mm)

Surface: All dimensions on the drawing includes surface treatment unless otherwise specified

Requirement class: Marked with [ ] according to SS2222 / NS1450 unless otherwise specified

Material type

Material standard

Basic dim / colour

View

CAD system : Solidworks
3D data: 1001317030 / SWA / 000 / 01
Status 3D data: Valid

Customer material number

Calculated mass: 37 g

Replaces

Calculated volume: 31068 mm³

KONGSBERG AUTOMOTIVE

Designed by: MARBGMCA
Changed by: MARBGMCA
Checked by: n/a
Released by: n/a
Released for: n/a
Released date: n/a

Document description: RFID GEN3 GENERIC

ECN number: SEE REV TABLE
No
Document part: 000
Document number: 1001317030
Status: SO
Version: 01

This document is the property of Kongsberg Automotive. The contents must not be duplicated, modified, transferred, communicated or used for manufacture unless so ordered by Kongsberg Automotive. Access is to be limited to employees of the recipient, who require the document for the execution of their duty.

Projection: ASME
Scale: 2:1
Format: D
Sheet (of): 1(2)