The University of Michigan Radiation Laboratory
3228 EECS Building
Ann Arbor, Michigan 48109-2122 USA
Tel: (734) 483-4211
Fax: (734) 647-2106
e-mail: liepa@umich.edu

Testing of

Electromagnetic Emissions

per

USA: CFR Title 47, Part 15.231
Canada: IC RSS-210/GENe

are herein reported for

Williams USA, LLC
Alpha 508I

Test Report No.: 417124-670
Copyright © 2014

Applicant/Provider:
Williams USA, LLC
13101 Eckles Rd., Plymouth Michigan 48170 USA
Phone: +1 (734) 416-5520, Fax: +1 (734) 416-1907
Contact Person: Terry Williams; williamsusallc@aol.com

Report by: Dr. Valdis V. Liepa Report Date of Issue: May 22, 2014

Results of testing completed on (or before) February 24, 2014 are as follows.

Emissions: The transmitter intentional emissions **COMPLY** with the regulatory limit(s) by no less than 1.7 dB. Transmit chain spurious harmonic emissions **COMPLY** by no less than 19.8 dB. Unintentional spurious emissions from digital circuitry **COMPLY** with radiated emission limit(s) by more than 20 dB.

Contents

1 Test Specifications, General Procedures, and Location **3**
1.1 Test Specification and General Procedures . . . 3
1.2 Test Location and Equipment Used . . . 4

2 Configuration and Identification of the Equipment Under Test **5**
2.1 Description and Declarations . . . 5
2.1.1 EUT Configuration . . . 5
2.1.2 Modes of Operation . . . 5
2.1.3 Variants . . . 5
2.1.4 Test Samples . . . 6
2.1.5 Functional Exerciser . . . 6
2.1.6 Modifications Made . . . 6
2.1.7 Production Intent . . . 6
2.1.8 Declared Exemptions and Additional Product Notes . . . 6

3 Emissions **7**
3.1 General Test Procedures . . . 7
3.1.1 Radiated Test Setup and Procedures . . . 7
3.1.2 Conducted Emissions Test Setup and Procedures . . . 10
3.1.3 Power Supply Variation . . . 10
3.2 Intentional Emissions . . . 11
3.2.1 Fundamental Emission Pulsed Operation . . . 11
3.2.2 Fundamental Emission Bandwidth . . . 12
3.2.3 Fundamental Emission . . . 13
3.3 Unintentional Emissions . . . 14
3.3.1 Transmit Chain Spurious Emissions . . . 14
3.3.2 Radiated Digital Spurious . . . 15

List of Tables

1 The University of Michigan Radiation Laboratory Equipment List. . . . 4
2 EUT Declarations. . . . 5
3 Pulsed Emission Characteristics (Duty Cycle). . . . 11
4 Intentional Emission Bandwidth. . . . 12
5 Fundamental Radiated Emissions. . . . 13
6 Transmit Chain Spurious Emissions. . . . 14

List of Figures

1 Photos of EUT. . . . 5
2 EUT Test Configuration Diagram. . . . 6
3 Radiated Emissions Diagram of the EUT. . . . 7
4 Radiated Emissions Test Setup Photograph(s). . . . 9
5 Pulsed Emission Characteristics (Duty Cycle). . . . 11
6 Intentional Emission Bandwidth. . . . 12

1 Test Specifications, General Procedures, and Location

1.1 Test Specification and General Procedures

The ultimate goal of Williams USA, LLC is to demonstrate that the Equipment Under Test (EUT) complies with the Rules and/or Directives below. Detailed in this report are the results of testing the Williams USA, LLC Alpha 508I for compliance to:

Country/Region	Rules or Directive	Referenced Section(s)
United States	Code of Federal Regulations	CFR Title 47, Part 15.231
Canada	Industry Canada	IC RSS-210/GENe

In association with the rules and directives outlined above, the following specifications and procedures are followed herein.

ANSI C63.4-2003	"Methods of Measurement of Radio-Noise Emissions from Low-Voltage Electrical and Electronic Equipment in the Range of 9 kHz to 40 GHz"
ICES-003; Issue 5 (2012)	"Information Technology Equipment (ITE) Limits and methods of measurement"
Industry Canada	"The Measurement of Occupied Bandwidth"

1.2 Test Location and Equipment Used

Test Location The EUT was fully tested by **The University of Michigan Radiation Laboratory**, 3228 EECS Building, Ann Arbor, Michigan 48109-2122 USA. The Test Facility description and attenuation characteristics are on file with the FCC Laboratory, Columbia, Maryland (FCC Reg. No: 91050) and with Industry Canada, Ottawa, ON (File Ref. No: IC 2057A-1).

Test Equipment Pertinent test equipment used for measurements at this facility is listed in Table 1. The quality system employed at The University of Michigan Radiation Laboratory has been established to ensure all equipment has a clearly identifiable classification, calibration expiry date, and that all calibrations are traceable to the SI through NIST, other recognized national laboratories, accepted fundamental or natural physical constants, ratio type of calibration, or by comparison to consensus standards.

Table 1: The University of Michigan Radiation Laboratory Equipment List.

Test Instrument	Manufacturer/Model	Q Number
Spectrum Analyzer (9kHz-26GHz)	Hewlett-Packard 8593E, SN: 3412A01131	HP8593E1
Power Meter	Hewlett-Packard, 432A	HP432A1
Harmonic Mixer (26-40 GHz)	Hewlett-Packard 11970A, SN: 3003A08327	HP11970A1
Harmonic Mixer (40-60 GHz)	Hewlett-Packard 11970U, SN: 2332A00500	HP11970U1
Harmonic Mixer (75-110 GHz)	Hewlett-Packard 11970W, SN: 2521A00179	HP11970W1
Harmonic Mixer (140-220 GHz)	Pacific Millimeter Prod., GMA, SN: 26	PMPGMA1
S-Band Std. Gain Horn	S/A, Model SGH-2.6	SBAND1
C-Band Std. Gain Horn	University of Michigan, NRL design	CBAND1
XN-Band Std. Gain Horn	University of Michigan, NRL design	XNBAND1
X-Band Std. Gain Horn	S/A, Model 12-8.2	XBAND1
X-band horn (8.2- 12.4 GHz)	Narda 640	XBAND2
X-band horn (8.2- 12.4 GHz)	Scientific Atlanta , 12-8.2, SN: 730	XBAND3
K-band horn (18-26.5 GHz)	FXR, Inc., K638KF	KBAND1
Ka-band horn (26.5-40 GHz)	FXR, Inc., U638A	KABAND1
U-band horn (40-60 GHz)	Custom Microwave, HO19	UBAND1
W-band horn(75-110 GHz)	Custom Microwave, HO10	WBAND1
G-band horn (140-220 GHz)	Custom Microwave, HO5R	GBAND1
Bicone Antenna (30-250 MHz)	University of Michigan, RLBC-1	LBBIC1
Bicone Antenna (200-1000 MHz)	University of Michigan, RLBC-2	HBBIC1
Dipole Antenna Set (30-1000 MHz)	University of Michigan, RLDP-1,-2,-3	UMDIP1
Dipole Antenna Set (30-1000 MHz)	EMCO 3121C, SN: 992 (Ref. Antennas)	EMDIP1
Active Rod Antenna (30 Hz-50 MHz)	EMCO 3301B, SN: 3223	EMROD1
Active Loop Antenna (30 Hz-50 MHz)	EMCO 6502, SN:2855	EMLOOP1
Ridge-horn Antenna (300-5000 MHz)	University of Michigan	UMRH1
Magnetic Field Strength Probe	HP 11941A	HPMFSP1
Electric Field Strength Probe	EG&G ACD-4A(R)	EGGACD41
Amplifier (5-1000 MHz)	Avantek, A11-1, A25-1S	AVAMP1
Amplifier (5-4500 MHz)	Avantek	AVAMP2
Amplifier (4.5-13 GHz)	Avantek, AFT-12665	AVAMP3
Amplifier (6-16 GHz)	Trek	TRAMP1
Amplifier (16-26 GHz)	Avantek	AVAMP4
LISN Box	University of Michigan	UMLISN1
Signal Generator	Hewlett-Packard 8657B	HPSG1

2 Configuration and Identification of the Equipment Under Test

2.1 Description and Declarations

The EUT is a wireless remote control transmitter. The EUT is approximately 8 x 3 x 1 in in dimension, and is depicted in Figure 1. It is powered by a 3 VDC two (2) AA alkaline batteries. This device is used to control an associated receiver in a manufacturing environment. Table 2 outlines provider declared EUT specifications.

Figure 1: Photos of EUT.

Table 2: EUT Declarations.

General Declarations			
Equipment Type:	Remote Control	**Country of Origin:**	China
Nominal Supply:	3 VDC	**Oper. Temp Range:**	Not Declared
Frequency Range:	301.105 to 302.780 MHz	**Antenna Dimension:**	Not Declared
Antenna Type:	PCB trace	**Antenna Gain:**	Not Declared
Number of Channels:	68	**Channel Spacing:**	Not Declared
Alignment Range:	Not Declared	**Type of Modulation:**	FSK
United States			
FCC ID Number:	2ABU9-508I	**Classification:**	DSC
Canada			
IC Number:	11768A–508I	**Classification:**	Remote Control Device

2.1.1 EUT Configuration

The EUT is configured for testing as depicted in Figure 2.

2.1.2 Modes of Operation

The EUT is capable of only one modes of operation, a manually activated transmitter.

2.1.3 Variants

There is only a single variant of the EUT, as tested. Normal samples were actuated for worst case on time, worst case emission bandwidth, and CW mode. Please see the description of operation exhibit supplied with this filing detailing the operating modes of this device.

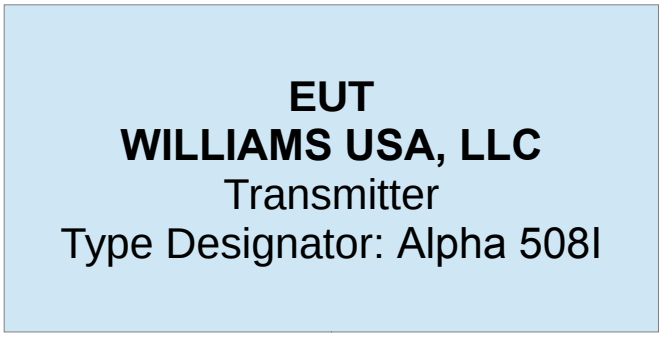

Figure 2: EUT Test Configuration Diagram.

2.1.4 Test Samples

Two samples were provided. One normal sample, and one sample modified for CW transmission.

2.1.5 Functional Exerciser

Normal operating EUT functionality was verified by observation of transmitted signal.

2.1.6 Modifications Made

No modifications were made to the EUT.

2.1.7 Production Intent

The EUT appears to be a production ready sample.

2.1.8 Declared Exemptions and Additional Product Notes

None.

3 Emissions

3.1 General Test Procedures

3.1.1 Radiated Test Setup and Procedures

Radiated electromagnetic emissions from the EUT are first evaluated in our shielded fully anechoic chamber. Spectrum and modulation characteristics of all emissions are recorded, and emissions above 1 GHz are fully characterized. The anechoic chamber contains a set-up similar to that of our outdoor 3-meter site, with a turntable and antenna mast. Instrumentation, including spectrum analyzers and other test equipment as detailed in Section 1.2 are employed. After indoor pre-scans, emission measurements are made on our outdoor 3-meter Open Area Test Site (OATS). If the EUT connects to auxiliary equipment and is table or floor standing, the configurations prescribed in ANSI C63.4 / CISPR-22 are followed. Alternatively, a layout closest to normal use (as declared by the provider) is employed if the resulting emissions appear to be worst-case in such a configuration. See Figure 3. All

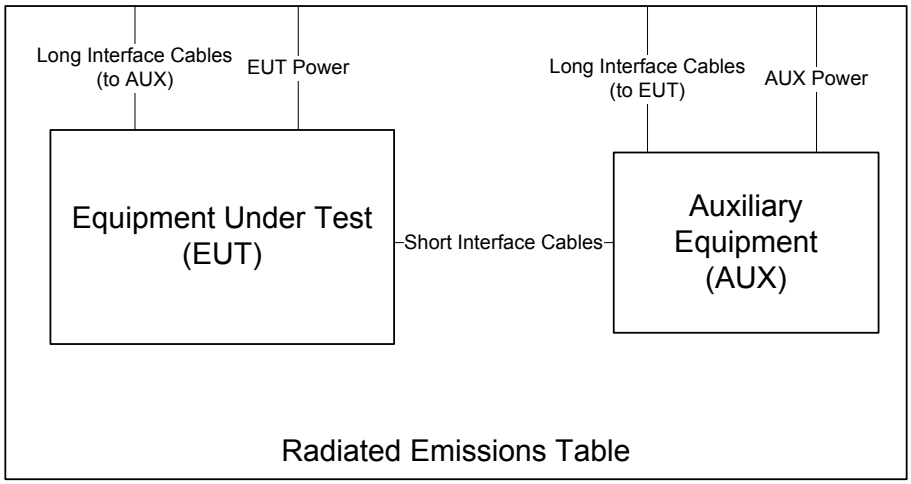

Figure 3: Radiated Emissions Diagram of the EUT.

intentionally radiating elements that are not fixed-mounted in use are placed on the test table lying flat, on their side, and on their end (3-axes) and the resulting worst case emissions are recorded. If the EUT is fixed-mounted in use, measurements are made with the device oriented in the manner consistent with installation and then emissions are recorded.

If the EUT exhibits spurious emissions due to internal receiver circuitry, such emissions are measured with an appropriate carrier signal applied. For devices with intentional emissions below 30 MHz, a shielded loop antenna is used as the test antenna. It is placed at a 1 meter receive height and appropriate low frequency magnetic field extrapolation to the regulatory limit distance is employed. Emissions between 30 MHz and 1 GHz are measured using tuned dipoles and/or calibrated broadband antennas. For both horizontal and vertical polarizations, the test antenna is raised and lowered from 1 to 4 m in height until a maximum emission level is detected. The EUT is then rotated through 360° in azimuth until the highest emission is detected. The test antenna is then raised and lowered one last time from 1 to 4 m and the worst case value is recorded. Emissions above 1 GHz are characterized using standard gain horn antennas or calibrated broadband ridge-horn antennas. Care is taken to ensure that test receiver resolution and video bandwidths meet the regulatory requirements, and that the emission bandwidth of the EUT is not reduced. Photographs of the test setup employed are depicted in Figure 4.

Where regulations allow for direct measurement of field strength, power values (dBm) measured on the test receiver / analyzer are converted to dBμV/m at the regulatory distance, using

$$E_{dist} = 107 + P_R + K_A - K_G + K_E - C_F$$

where P_R is the power recorded on spectrum analyzer, in dBm, K_A is the test antenna factor in dB/m, K_G is the combined pre-amplifier gain and cable loss in dB, K_E is duty correction factor (when applicable) in dB, and C_F is

a distance conversion (employed only if limits are specified at alternate distance) in dB. This field strength value is then compared with the regulatory limit. If effective isotropic radiated power (EIRP) is compute, it is computed as

$$EIRP(dBm) = E_{3m}(dB\mu V/m) - 95.2.$$

When presenting data at each frequency, the highest measured emission under all possible EUT orientations (3-axes) is reported.

Figure 4: Radiated Emissions Test Setup Photograph(s).

3.1.2 Conducted Emissions Test Setup and Procedures

Battery Power Conducted Spurious The EUT is not subject to measurement of power line conducted emissions as it is powered solely by its internal battery.

3.1.3 Power Supply Variation

Tests at extreme supply voltages are made if required by the the procedures specified in the test standard, and results of this testing are detailed in this report.

In the case the EUT is designed for operation from a battery power source, the extreme test voltages are evaluated over the range specified in the test standard; no less than ±10% of the nominal battery voltage declared by the manufacturer. For all battery operated equipment, worst case intentional and spurious emissions are re-checked employing a new (fully charged) battery.

3.2 Intentional Emissions

3.2.1 Fundamental Emission Pulsed Operation

The details and results of testing the EUT for pulsed operation are summarized in Table 3. Plots showing the measurements made to obtain these values are provided in Figure 5.

Table 3: Pulsed Emission Characteristics (Duty Cycle).

In all operating modes, the DUT can, in the worst case, transmit one FSK frame within any given 99 ms pulse period while the button is depressed. Each frame has a maximum width of 50 ms.

Duty Cycle Computation							Williams; FCC/IC
1	KE = 50 ms / 99 ms = 0.505 or -5.9 dB						
2							

EQUIP USED: HP8593E1, UMDIP1, UMRH1 Meas. U of Mich.; 2/24/2014

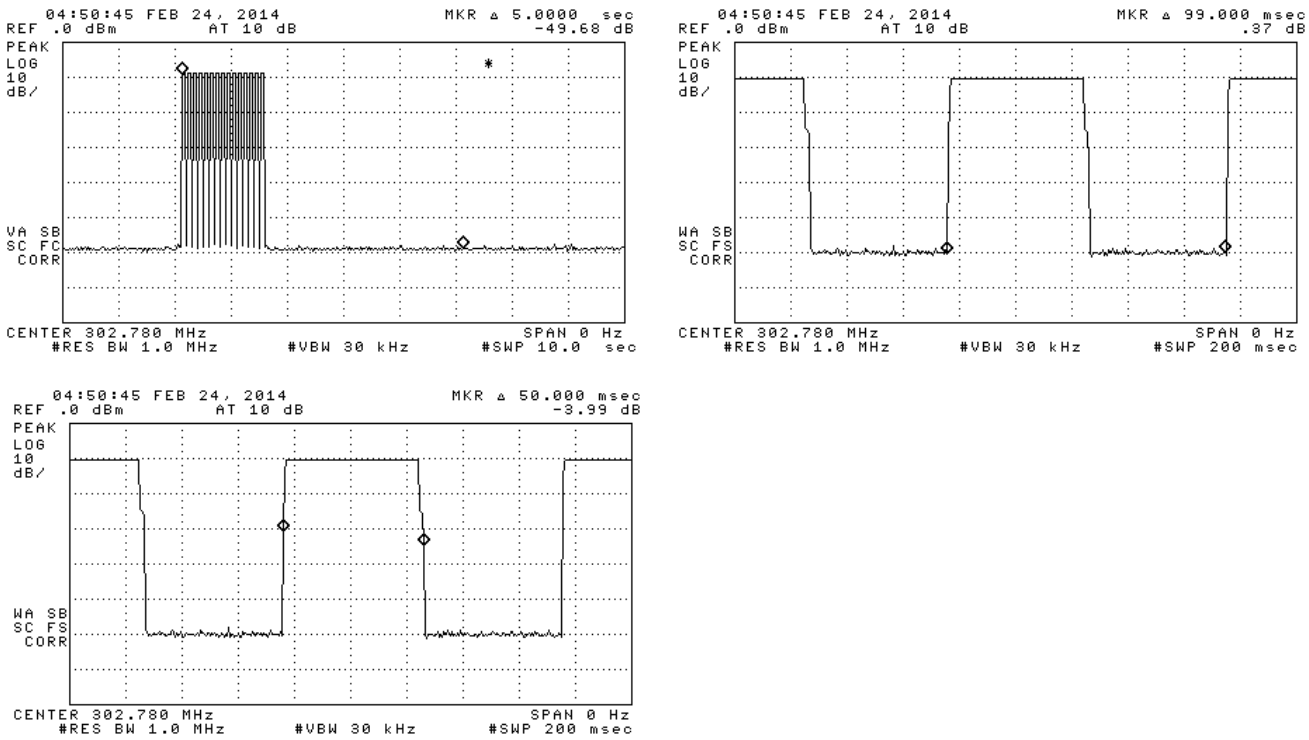

Figure 5: Pulsed Emission Characteristics (Duty Cycle).

3.2.2 Fundamental Emission Bandwidth

Emission bandwidth (EBW) of the EUT is measured with the device placed in the test mode(s) with the shortest available frame length and minimum frame spacing. Radiated emissions are recorded following the test procedures listed in Section 1.1. The 20 dB EBW is measured as the max-held peak-detected signal when the IF bandwidth is greater than or equal to 1% of the receiver span. For complex modulations other than ASK and FSK, the 99% emission bandwidth per IC test procedures has a different result, and is also separately reported.The results of EBW testing are summarized in Table 4. Plots showing measurements employed to obtain the emission bandwidth reported are provided in Figure 6.

Table 4: Intentional Emission Bandwidth.

The emission bandwidth of the signal is shown in the following Figure. The allowed 99% bandwidth is 0.25% of 301.1 MHz, or 752.75 kHz.

Measured Emission Bandwidth							Williams; FCC/IC
#	EBW meas. (kHz)						
1	48.0						

EQUIP USED: HP8593E1, UMDIP1, UMRH1 Meas. U of Mich.; 2/24/2014

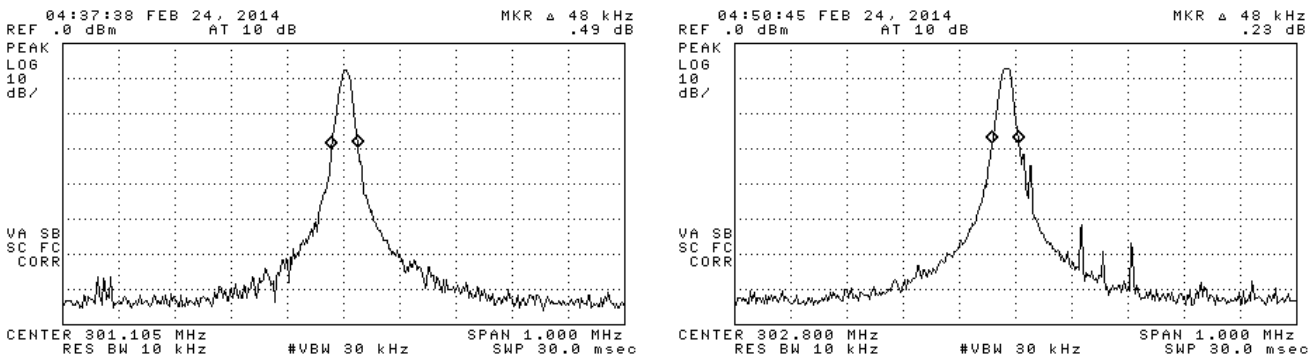

Figure 6: Intentional Emission Bandwidth.

3.2.3 Fundamental Emission

Following the test procedures listed in Section 1.1, radiated emissions measurements are made on the EUT for both Horizontal and Vertical polarized fields. Table 5 details the results of these measurements.

Table 5: Fundamental Radiated Emissions.

Frequency Range	Det	IF Bandwidth	Video Bandwidth
25 MHz ≤ f ≤ 1 000 MHz	Pk/QPk	120 kHz	300 kHz
f > 1 000 MHz	Pk	1 MHz	3 MHz
f > 1 000 MHz	Avg	1 MHz	10kHz

Fundamental Radiated Emission											Williams; FCC/IC
#	Freq. MHz	Ant. Used	Ant. Pol.	Pr dBm	Det. Used	Ka dB/m	Kg dB	E3* dBμV/m	E3lim dBμV/m	Pass dB	Comments
1	**Low Channel (301.1 MHz)**										
2	301.1	Dip	H	-23.4	Pk	18.1	23.0	72.8	74.7	**1.9**	side
3	301.1	Dip	V	-27.9	Pk	18.1	23.0	68.3	74.7	6.4	end
4	**High Channel (302.8 Mhz)**										
5	302.8	Dip	H	-23.1	Pk	18.2	23.0	73.2	74.9	**1.7**	side
6	302.8	Dip	V	-28.1	Pk	18.2	23.0	68.2	74.9	6.7	end
7											
8	* Includes 5.9 dB Duty Cycle										
9											

EQUIP USED: HP8593E1, UMDIP1 Meas. U of Mich.; 2/24/2014

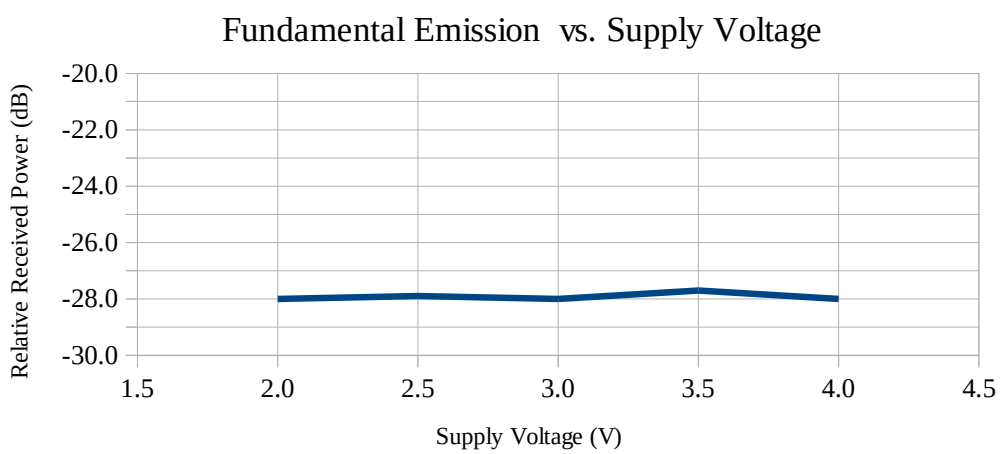

3.3 Unintentional Emissions

3.3.1 Transmit Chain Spurious Emissions

The results for the measurement of transmit chain spurious emissions at the nominal voltage and temperature are provided in Table 6. Measurements are performed to 10 times the highest fundamental operating frequency.

Table 6: Transmit Chain Spurious Emissions.

Frequency Range	Det	IF Bandwidth	Video Bandwidth
25 MHz ≤ f ≤ 1 000 MHz	Pk/QPk	120 kHz	300 kHz
f > 1 000 MHz	Pk	1 MHz	3 MHz
f > 1 000 MHz	Avg	1 MHz	10kHz

Spurious Radiated Emissions											Williams; FCC/IC
#	Freq. MHz	Ant. Used	Ant. Pol.	Pr dBm	Det. Used	Ka dB/m	Kg dB	E3* dBμV/m	E3lim dBμV/m	Pass dB	Comments
1	**Low Channel (301.1 MHz)**										
2	602.2	Dip	H	-76.7	Pk	24.0	20.0	28.4	54.7	26.3	Max all, noise
3	602.2	Dip	V	-76.5	Pk	24.0	20.0	28.6	54.7	26.1	Max all, noise
4	903.3	Dip	H	-77.4	Pk	28.3	17.9	34.1	54.7	**20.7**	Max all, noise
5	903.3	Dip	V	-77.6	Pk	28.3	17.9	33.9	54.7	20.9	Max all, noise
6	1204.4	Horn	H	-70.2	Pk	20.6	28.0	23.5	54.0	30.5	Max all, noise
7	1505.5	Horn	H	-69.6	Pk	21.5	28.0	25.0	54.0	29.0	Max all, noise
8	1806.6	Horn	H	-70.1	Pk	22.2	28.0	25.2	54.7	29.5	Max all, noise
9	2107.7	Horn	H	-70.8	Pk	23.0	28.1	25.2	54.7	29.5	Max all, noise
10	2408.8	Horn	H	-71.3	Pk	23.9	28.3	25.4	54.7	29.3	Max all, noise
11	2709.9	Horn	H	-71.4	Pk	24.8	28.2	26.3	54.0	27.7	Max all, noise
12	3011.0	Horn	H	-70.4	Pk	25.8	27.9	28.6	54.7	26.1	Max all, noise
13	**High Channel (302.8 Mhz)**										
14	605.6	Dip	H	-74.8	Pk	24.1	19.9	30.4	54.9	24.4	Max all, noise
15	605.6	Dip	V	-76.6	Pk	24.1	19.9	28.6	54.9	26.2	Max all, noise
16	908.4	Dip	H	-76.5	Pk	28.4	17.9	35.1	54.9	**19.8**	Max all, noise
17	908.4	Dip	V	-77.2	Pk	28.4	17.9	34.4	54.9	20.5	Max all, noise
18	1211.2	Horn	H	-71.1	Pk	20.6	28.0	22.6	54.0	31.4	Max all, noise
19	1514.0	Horn	H	-71.2	Pk	21.5	28.0	23.4	54.0	30.6	Max all, noise
20	1816.8	Horn	H	-71.7	Pk	22.2	28.0	23.6	54.9	31.3	Max all, noise
21	2119.6	Horn	H	-69.9	Pk	23.0	28.1	26.1	54.9	28.8	Max all, noise
22	2422.4	Horn	H	-70.9	Pk	23.9	28.3	25.8	54.9	29.1	Max all, noise
23	2725.2	Horn	H	-71.3	Pk	24.8	28.2	26.4	54.0	27.6	Max all, noise
24	3028.0	Horn	H	-71.1	Pk	25.8	27.9	27.9	54.9	27.0	Max all, noise
25											
26											
27	* Includes 5.9 dB Duty Cycle.										
28											

EQUIP USED: HP8593E1, UMDIP1, UMRH1 Meas. U of Mich.; 2/24/2014

3.3.2 Radiated Digital Spurious

The results for the measurement of digital spurious emissions are not reported herein as all digital emissions were greater than 20 dB below the regulatory limit. Radiation from digital components was measured to 4 GHz, or to five times the maximum digital component operating frequency, whichever is greater.