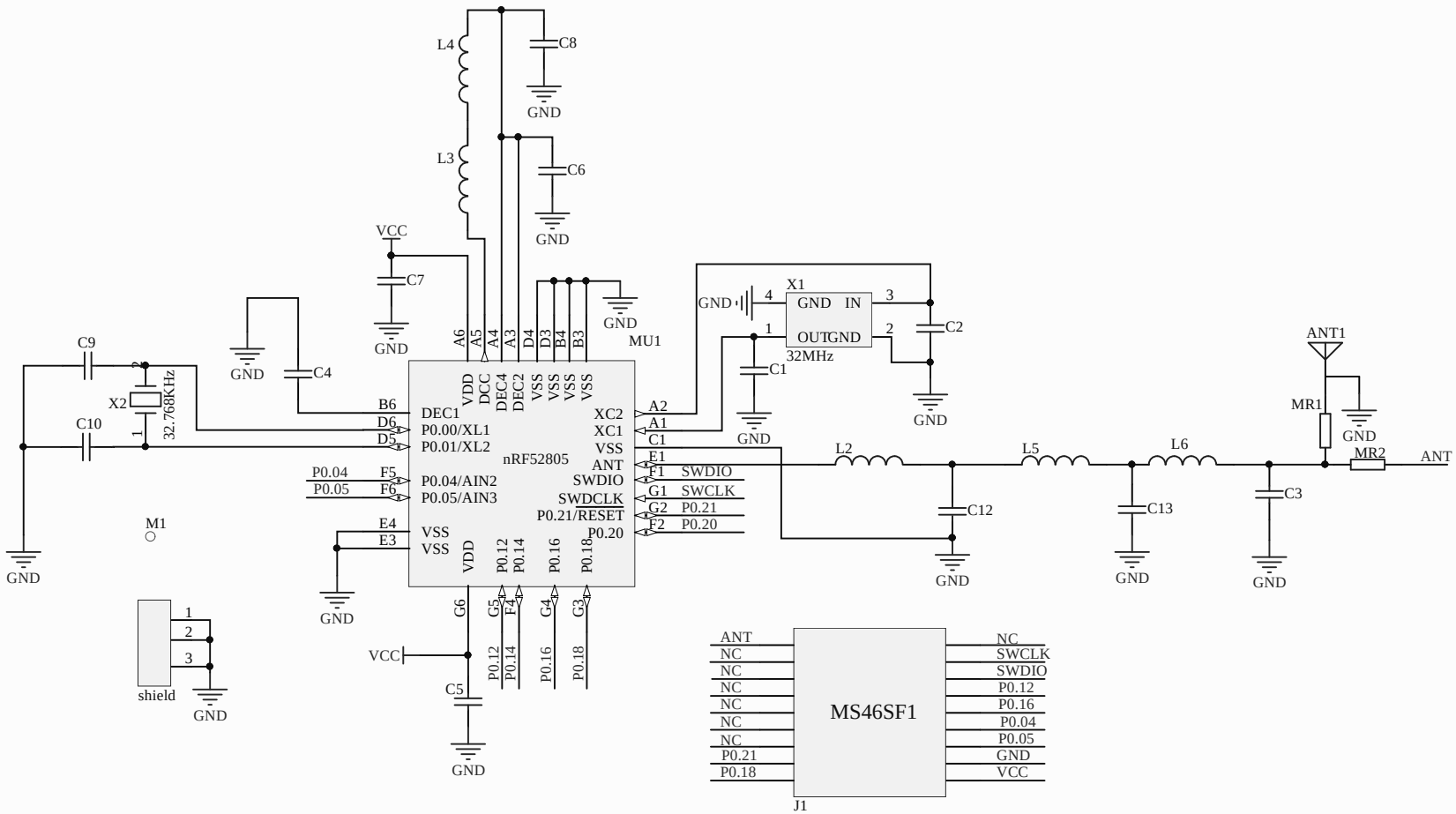

Title: MS46SF1	Revision: V1.0	
Project Number: PS1971_Project.PrjPcb		
Engineer: JONE	Sheet 1 of 1	
Checked By: Shain	Date: 2020/3/25	
File: MS46SF1_SCH_V1.0.SchDoc		