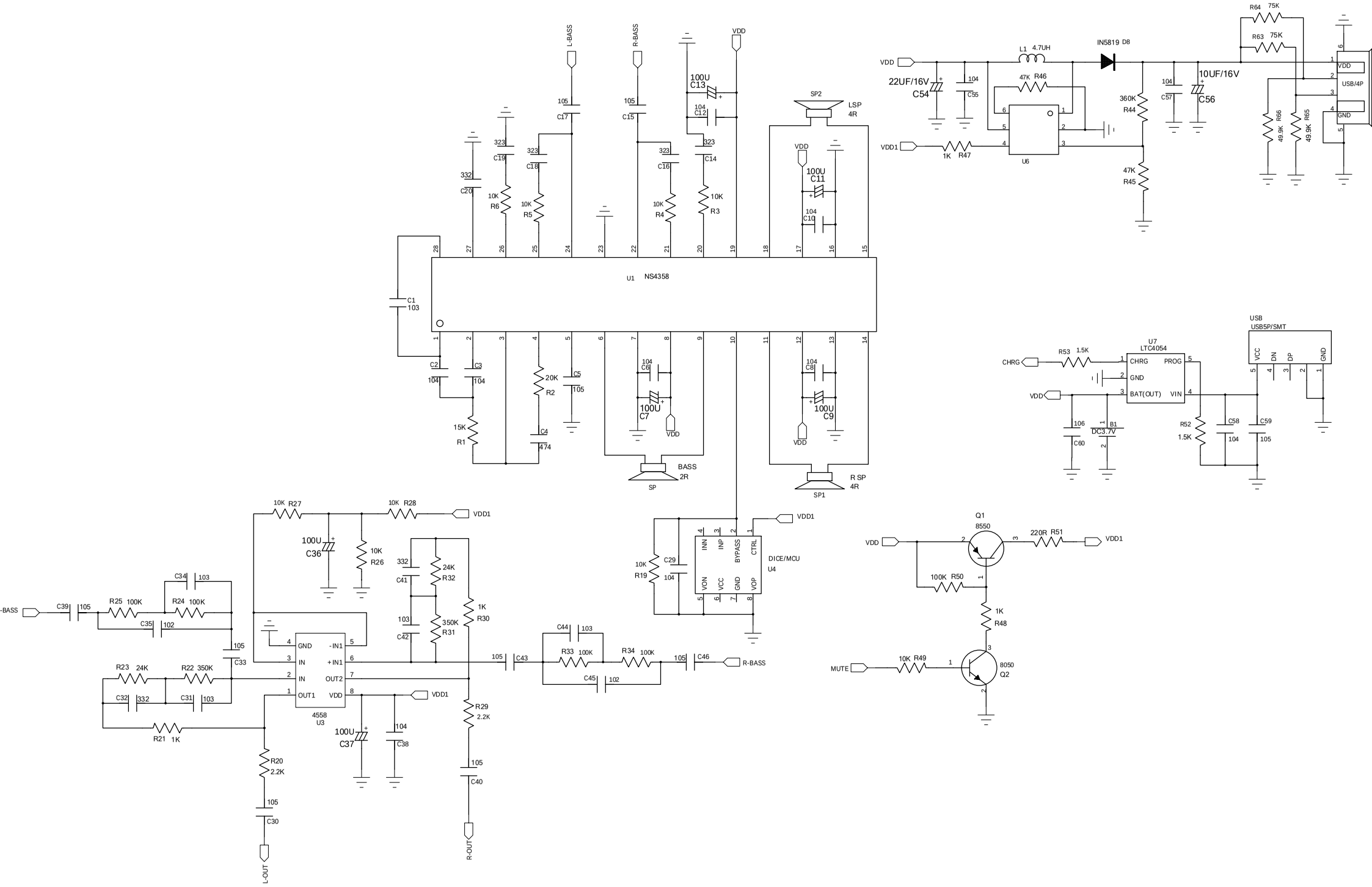
U1 NS4358
L-BASS
R-BASS
VDD
VDD1
SP2
LSP 4R
BASS 2R
SP
R SP 4R
SP1
C1 103
C2 104
C3 104
R1 15K
R2 20K
C4 474
C5 105
C6 104
C7 100U
C8 104
C9 100U
C10 104
C11 100U
C12 104
C13 100U
C14 323
R3 10K
R4 10K
C15 105
C16 323
C17 105
C18 323
R5 10K
C19 323
R6 10K
C20 332
DICE/MCU U4
INN INP BYPASS CTRL VON VCC GND VOP
R19 10K
C29 104
U6
L1 4.7UH
IN5819 D8
R46 47K
R44 360K
R45 47K
R47 1K
C54 22UF/16V
C55 104
C56 10UF/16V
C57 104
R64 75K
R63 75K
R66 49.9K
R65 49.9K
USB/4P
GND
U7 LTC4054
CHRG PROG GND BAT(OUT) VIN
R53 1.5K
R52 1.5K
C58 104
C59 105
C60 106
B1 DC3.7V
USB USB5P/SMT
VCC DN DP GND
Q1 8550
220R R51
100K R50
1K R48
Q2 8050
MUTE
10K R49
R-BASS
R-OUT
L-OUT
C39 105
R25 100K
R24 100K
C34 103
C35 102
C33 105
R23 24K
R22 350K
C32 332
C31 103
R21 1K
R20 2.2K
C30 105
4558 U3
GND IN IN OUT1 -IN1 +IN1 OUT2 VDD
C36 100U
R26 10K
R27 10K
R28 10K
C41 332
R32 24K
C42 103
R31 350K
R30 1K
R29 2.2K
C40 105
C37 100U
C38 104
C43 105
C44 103
R33 100K
R34 100K
C45 102
C46 105

REVISION RECORD			
LTR	ECO NO:	APPROVED:	DATE:

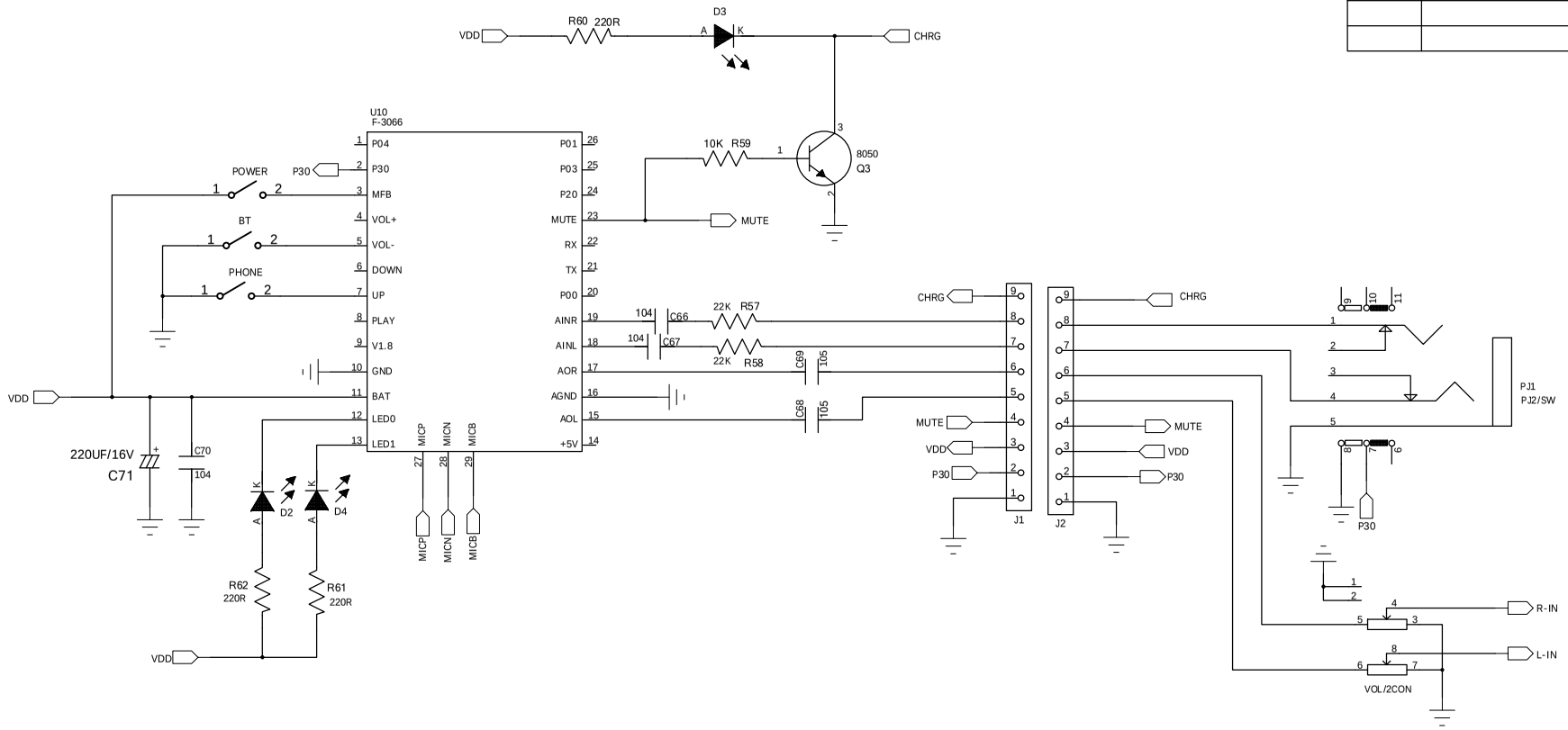

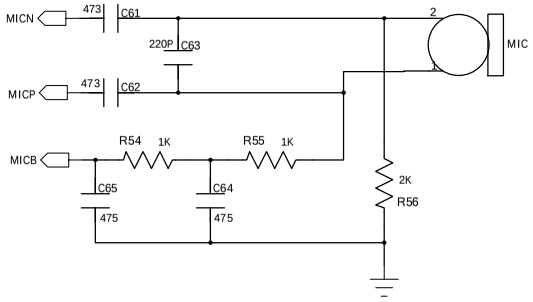

DRAWN:	DATED:	COMPANY:	
CHECKED:	DATED:	TITLE:	
QUALITY CONTROL:	DATED:	CODE: / SIZE: B	DRAWING NO: / REV:
RELEASED:	DATED:	SCALE:	SHEET: 2 OF 2