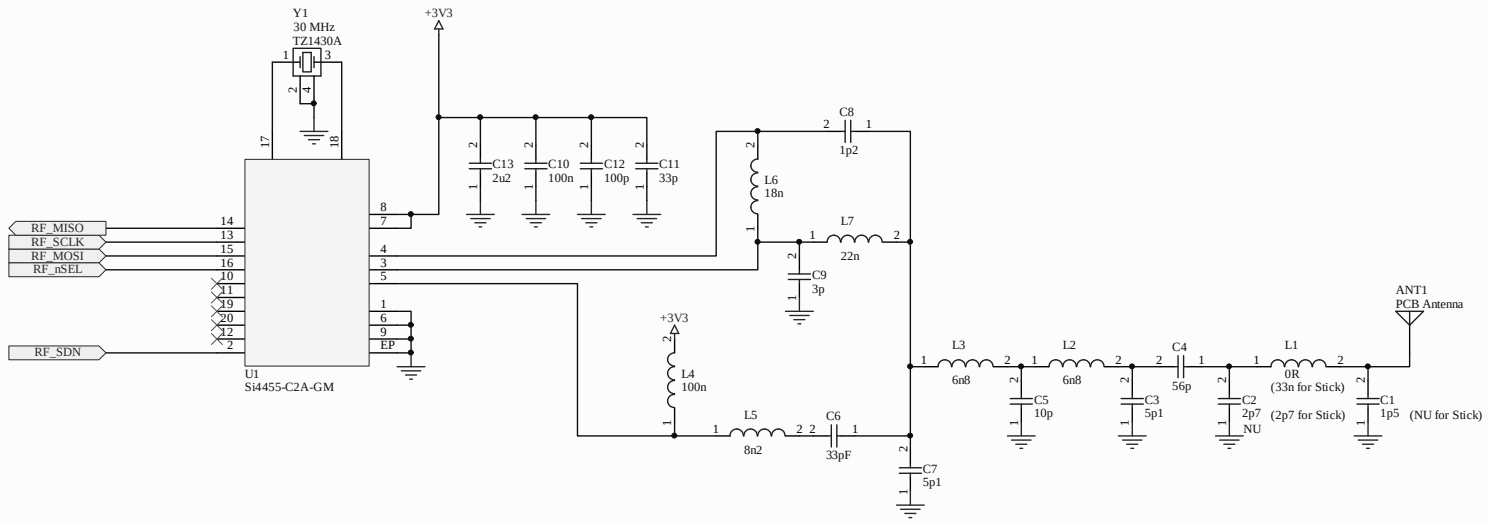

Title	PARK-DADDY IR RX		
Size B	Number PDY-200		Revision A
Date: 12/7/2015		Sheet 2 of 2	
File: C:\Users\..\PDY-200_Sheet2.SchDoc		Drawn By: ENGLISH	