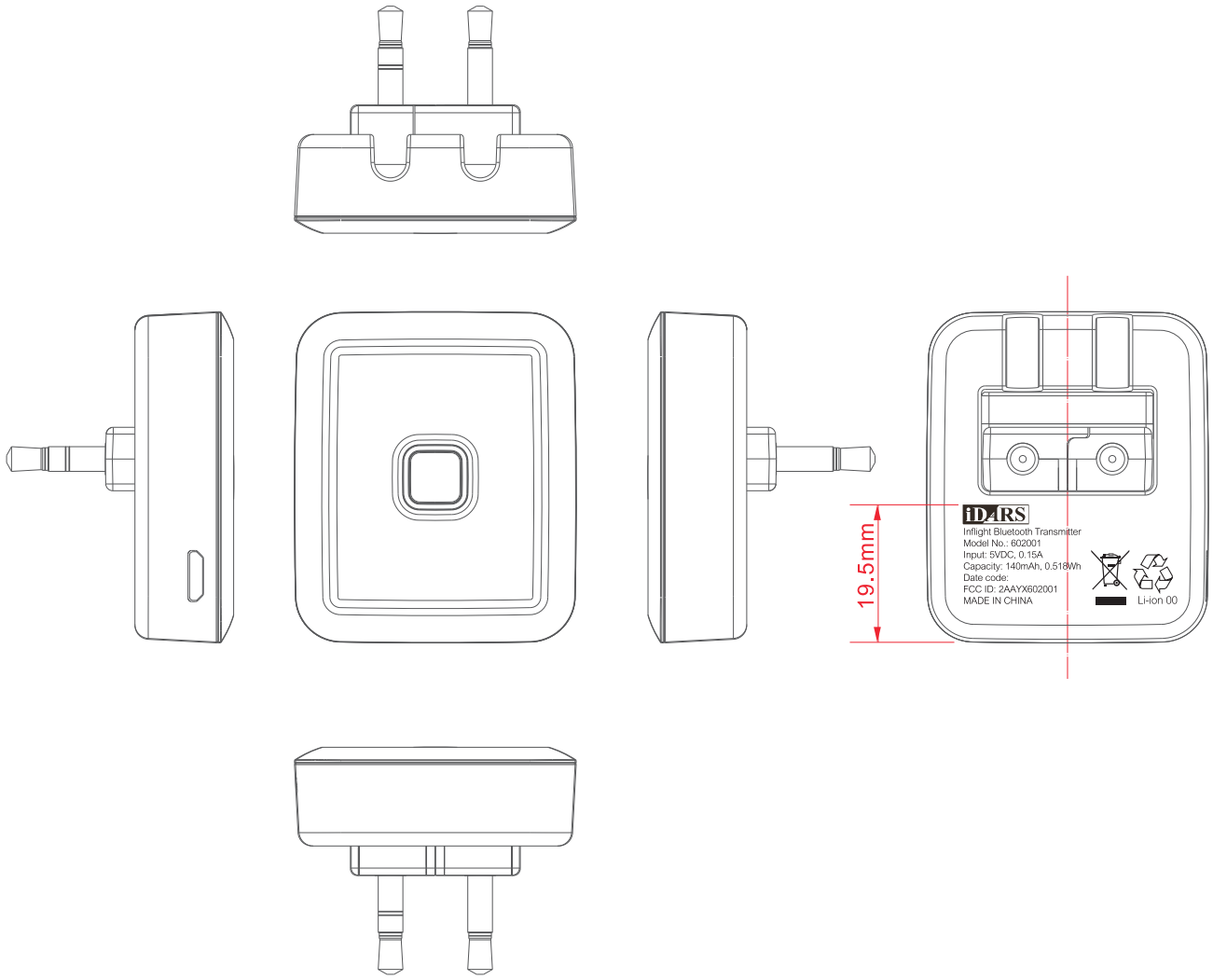

Scale 1:1

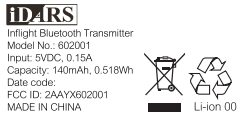

Scale 2:1

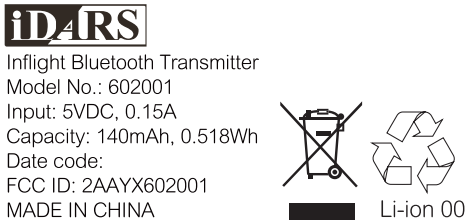

Item	Contents of change	CHK	APV	M/D/Y

RANGE	Pla	Met	Ins	Por	Cab	Pac	Gas	PCB
0~6								
6~30								
30~80								
80~180								
180~315								
315~800								

DATE	03. 01-2018	MATERIAL	Plastic	TREATMENT	Laser (雷雕)	REMARK	
UNIT	mm	SCALE	1:1	Model #			
DRAWN	CHECKED	APPROVED	PRODUCT NAME	Air - plant -BT		R	
Peggy iDARS Mar.01 2018	Martina iDARS Mar.01 2018						

iDARS Inc.