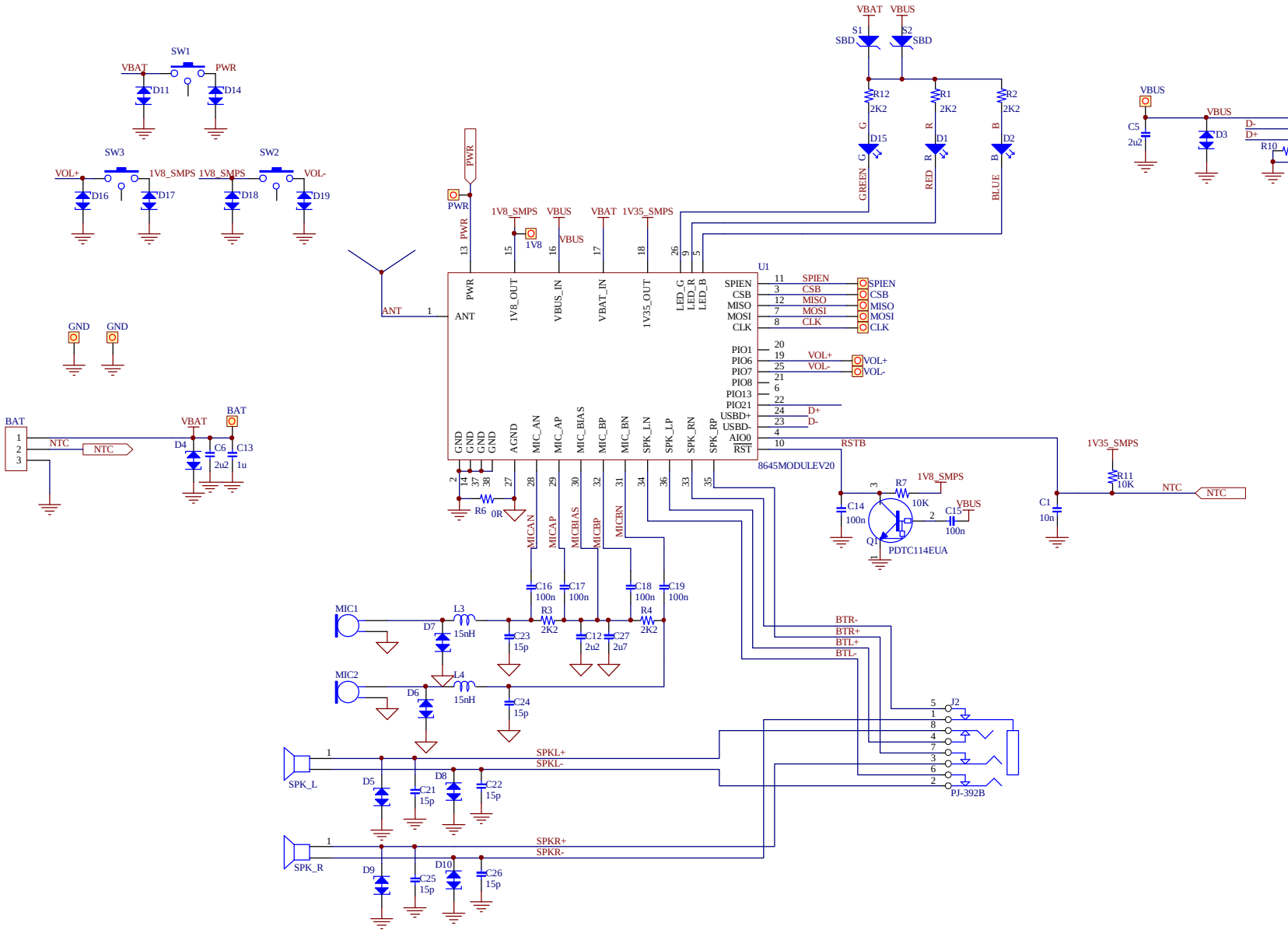

REV	modify content	DATE

SCH					
	DSND	Jenny	DATE	13-04-24	
	CHKD		DATE		
	APPR		DATE		
REV.	A	Requirement:			PART NAME:
Modification Status	0				PART No.:125-01012500R
Page	1/1				MODEL NAME: CYGNET
					DRAWING No.: S125-01012500R