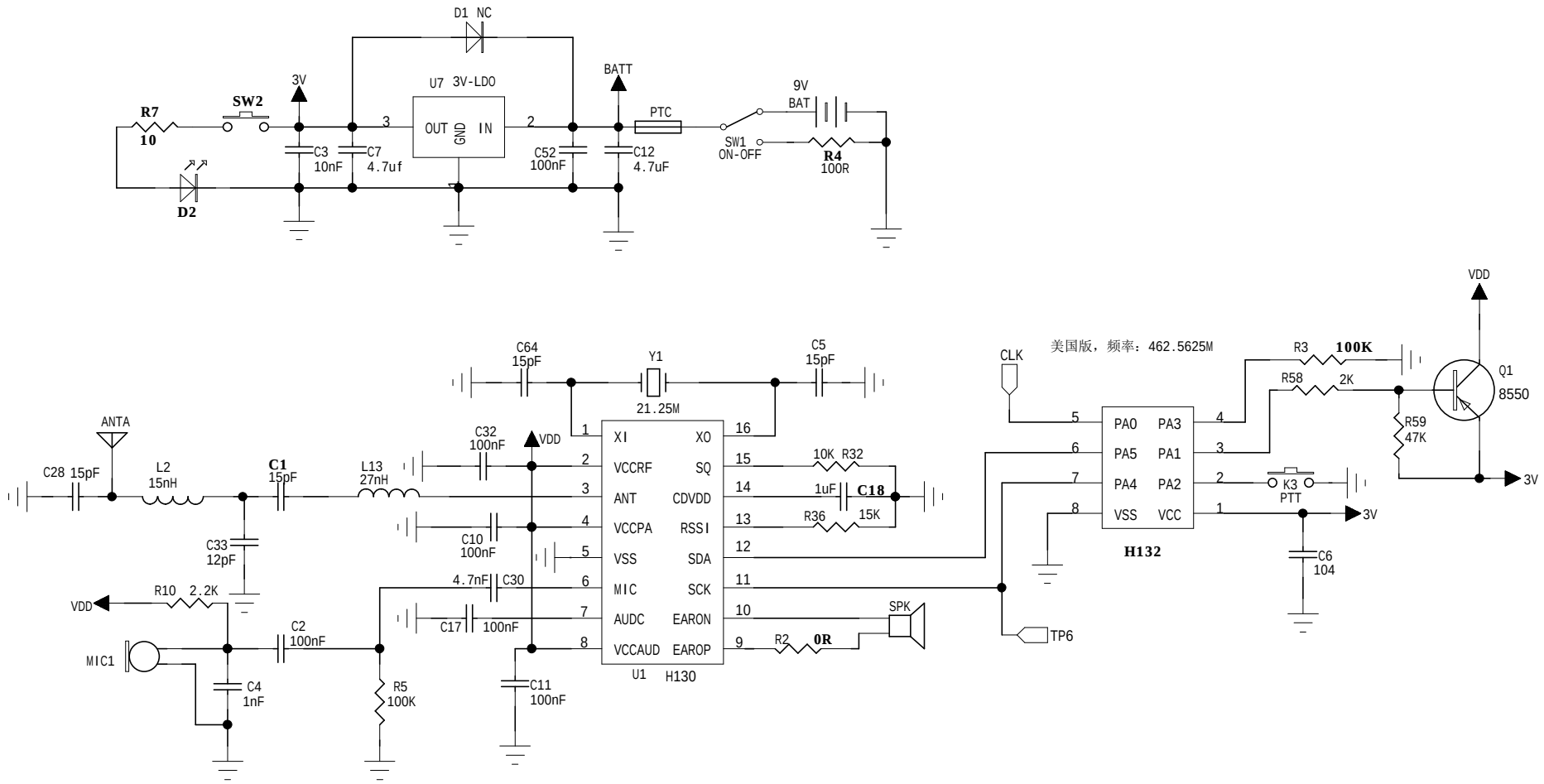


| | | | | | |
|---|---|---|---|---|---|
| LUNG CHEONG | TITLE: | 41174 walkie talkie | DESIGN BY: | DRAWING BY: | APPROVED BY: | SHEET: |
| | FUNCTION: | | | longdanyu | | 1 of 1 |
| | DWG NO: | Y342 | | 2021-06-01 | | V1.0 |