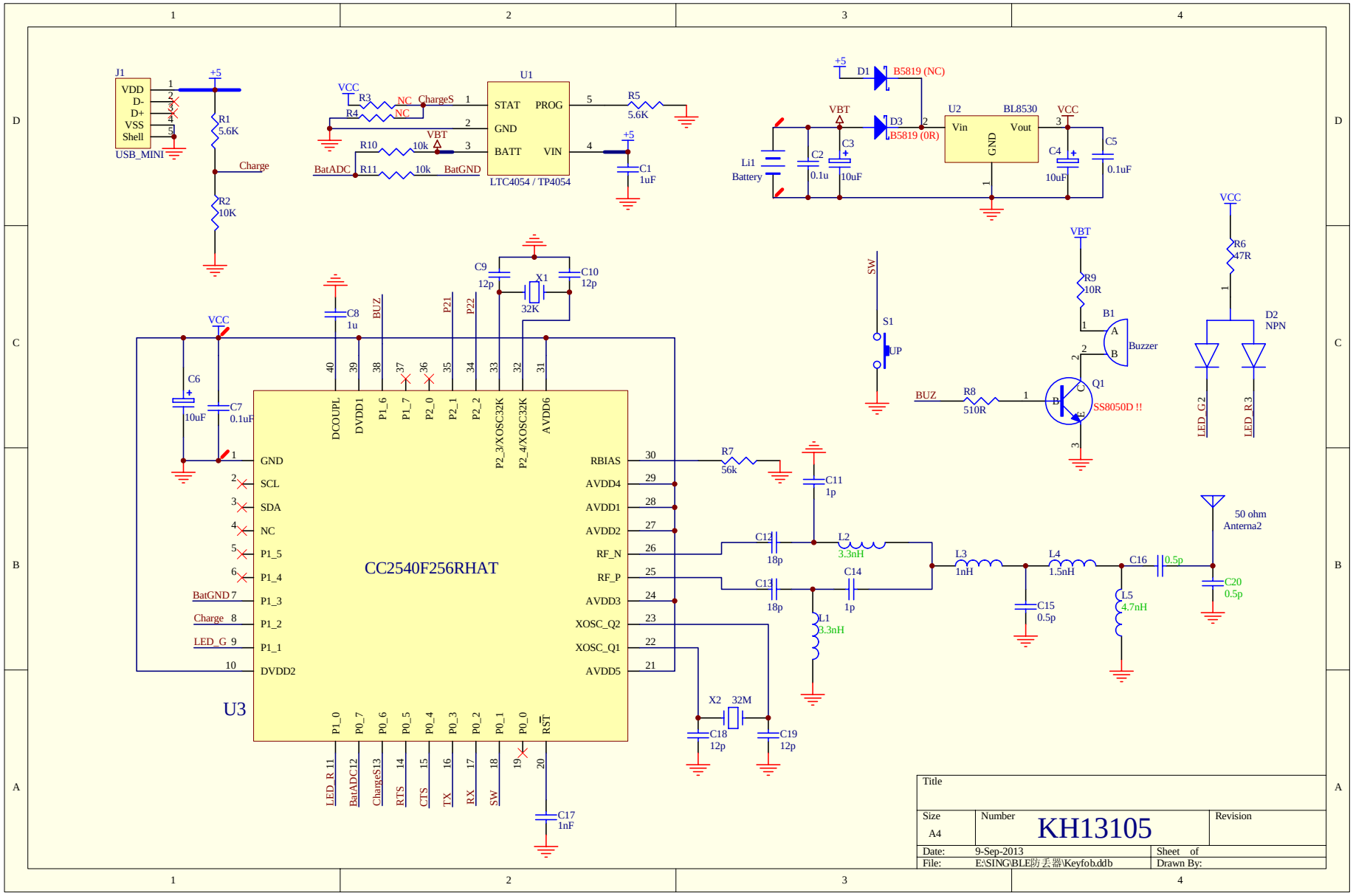

Title		
Size A4	Number KH13105	Revision
Date: 9-Sep-2013	Sheet of	
File: E:\SING\BLE防丢器\Keyfob.ddb	Drawn By:	