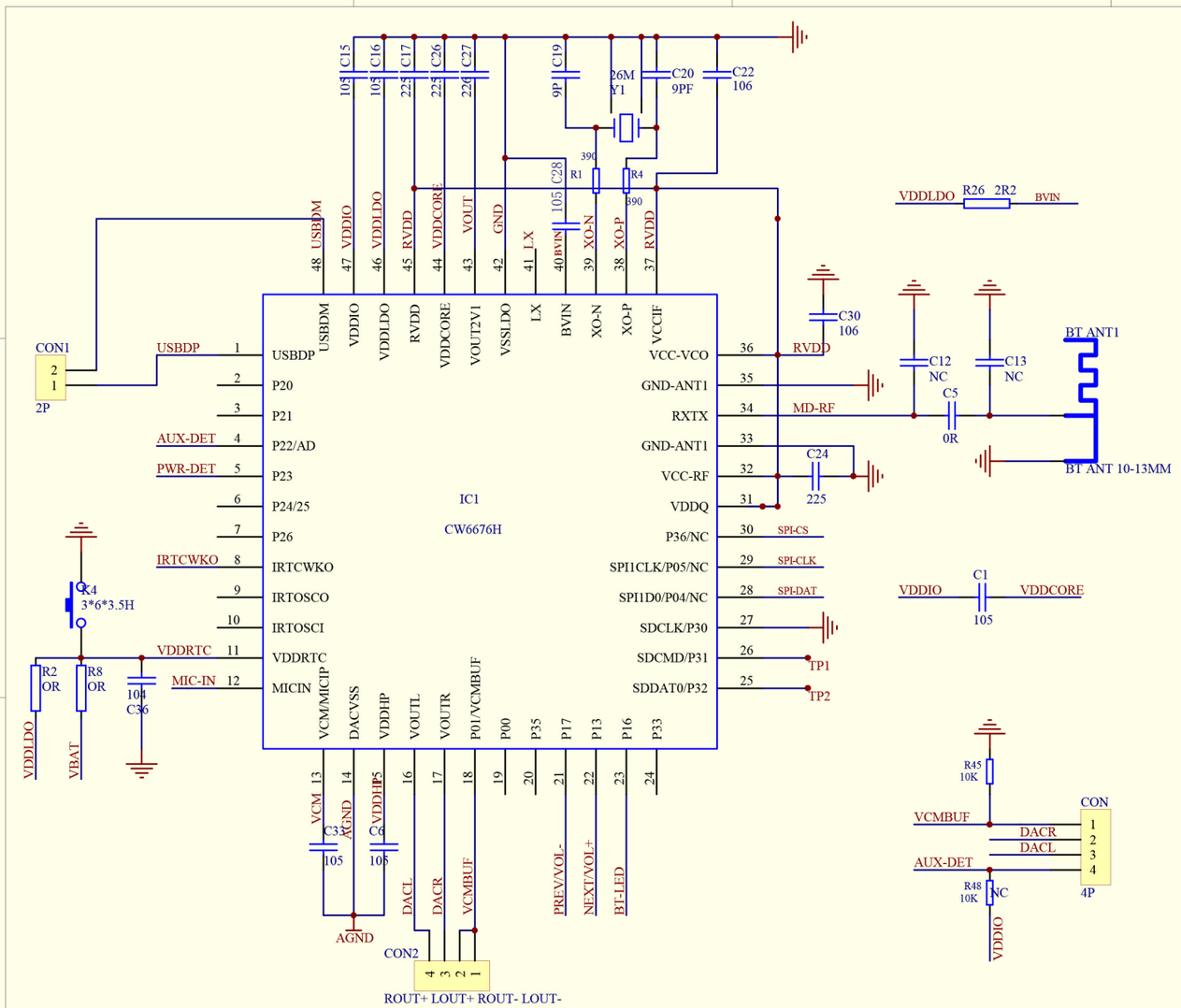

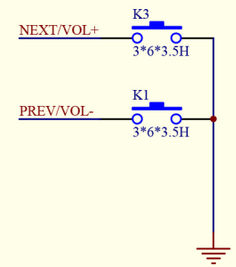

KEY
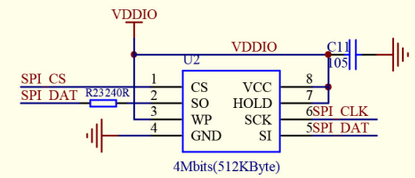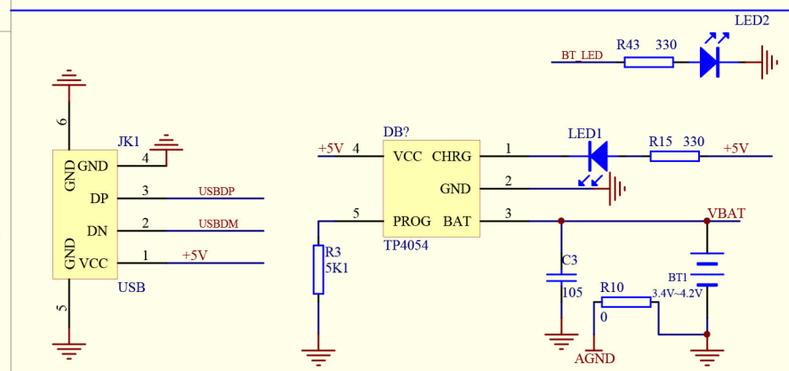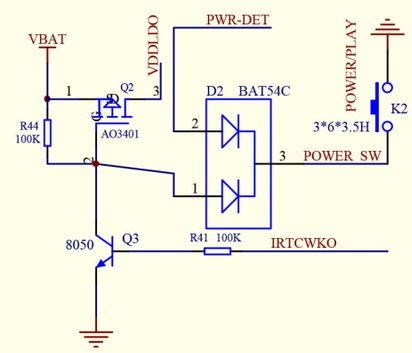
SPI FLASH