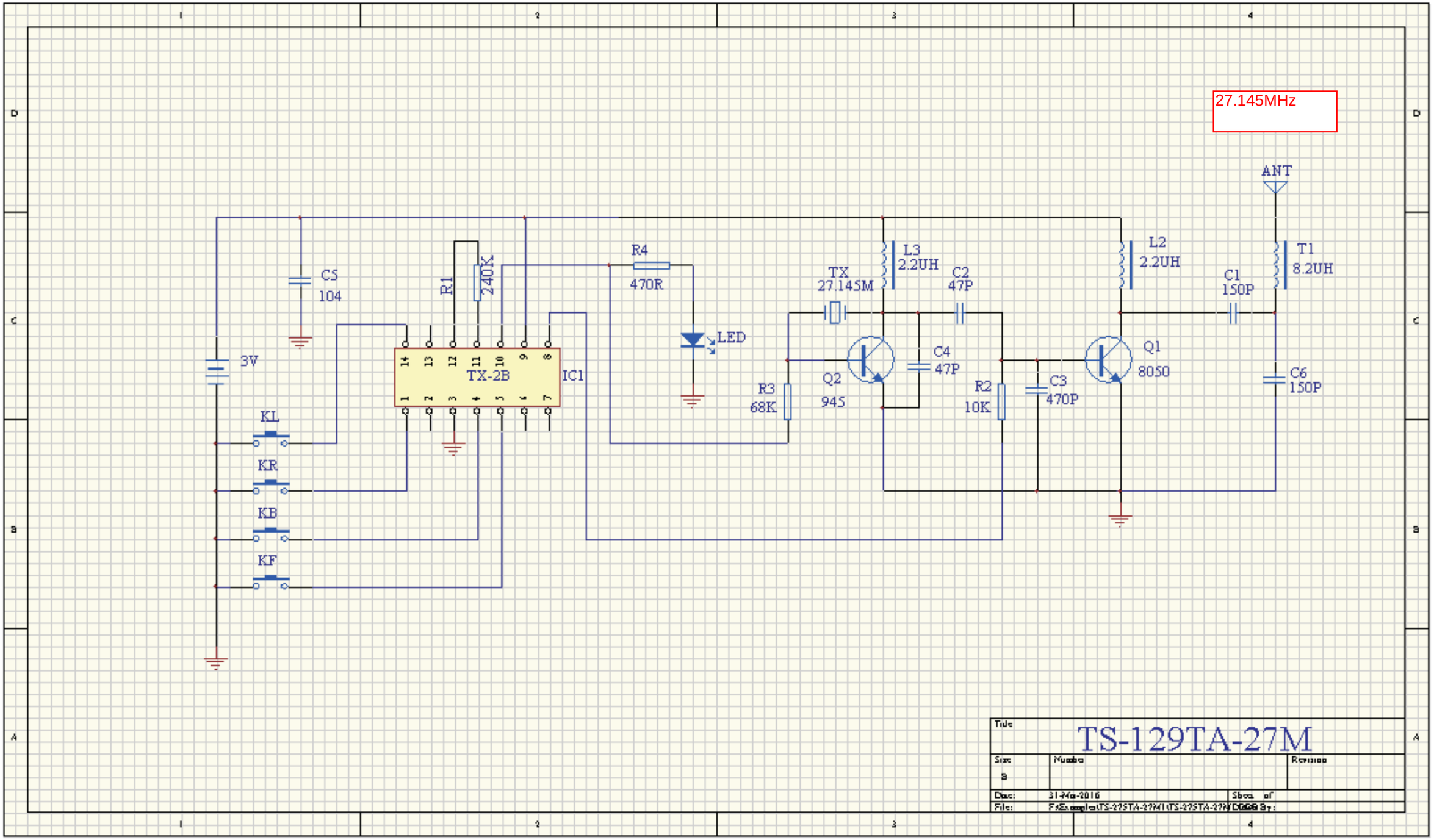
27.145MHz
ANT
C5
104
R1
240K
R4
470R
LED
TX-2B
IC1
3V
KL
KR
KB
KF
TX
27.145M
L3
2.2UH
C2
47P
L2
2.2UH
C1
150P
T1
8.2UH
Q2
945
C4
47P
R3
68K
R2
10K
C3
470P
Q1
8050
C6
150P
Title
TS-129TA-27M
Size
B
Number
Revision
Date:
31-Mar-2016
Sheet of
File:
Drawn By: