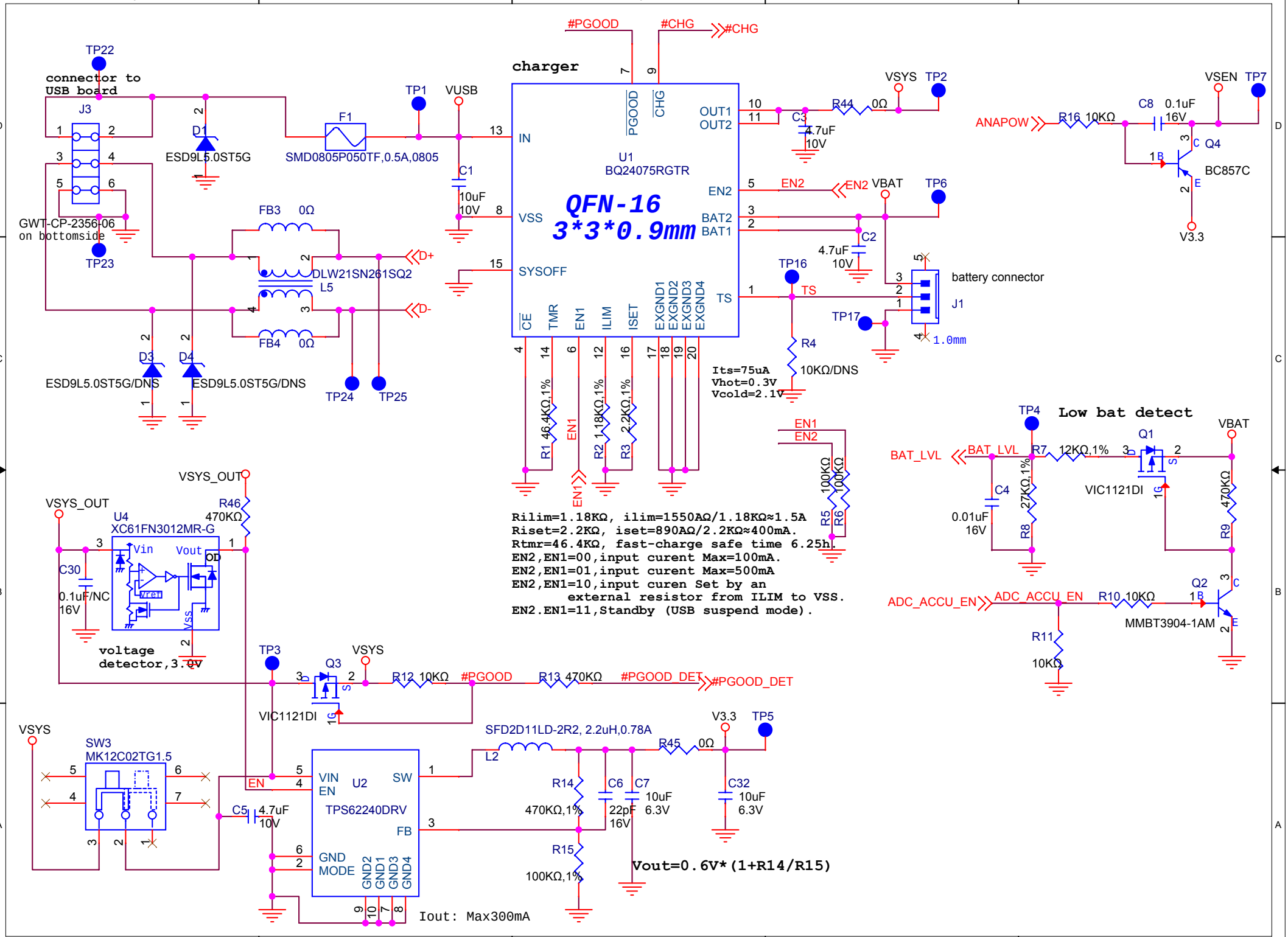
charger
QFN-16
3*3*0.9mm
U1
BQ24075RGTR
IN
VSS
SYSOFF
PGOOD
CHG
OUT1
OUT2
EN2
BAT2
BAT1
TS
CE
TMR
EN1
ILIM
ISET
EXGND1
EXGND2
EXGND3
EXGND4
#PGOOD
#CHG
TP22
connector to USB board
J3
GWT-CP-2356-06 on bottomside
TP23
D1
ESD9L5.0ST5G
F1
SMD0805P050TF,0.5A,0805
TP1
VUSB
C1
10uF 10V
FB3 0Ω
FB4 0Ω
DLW21SN261SQ2
L5
D+
D-
D3
D4
ESD9L5.0ST5G/DNS
TP24
TP25
VSYS
TP2
R44 0Ω
C3 4.7uF 10V
EN2
VBAT
TP6
C2 4.7uF 10V
TP16
TP17
battery connector
J1
1.0mm
R4 10KΩ/DNS
Its=75uA
Vhot=0.3V
Vcold=2.1V
R1 46.4KΩ,1%
R2 1.18KΩ,1%
R3 2.2KΩ,1%
R5 100KΩ
R6 100KΩ
Rilim=1.18KΩ, ilim=1550AΩ/1.18KΩ≈1.5A
Riset=2.2KΩ, iset=890AΩ/2.2KΩ≈400mA.
Rtmr=46.4KΩ, fast-charge safe time 6.25h.
EN2,EN1=00,input curent Max=100mA.
EN2,EN1=01,input curent Max=500mA
EN2,EN1=10,input curen Set by an
external resistor from ILIM to VSS.
EN2.EN1=11,Standby (USB suspend mode).
ANAPOW
R16 10KΩ
C8 0.1uF 16V
VSEN
TP7
Q4
BC857C
V3.3
TP4
Low bat detect
BAT_LVL
R7 12KΩ,1%
Q1
VIC1121DI
C4 0.01uF 16V
R8 27KΩ,1%
R9 470KΩ
ADC_ACCU_EN
R10 10KΩ
Q2
MMBT3904-1AM
R11 10KΩ
VSYS_OUT
U4
XC61FN3012MR-G
Vin
Vout
OD
Vref
Vss
R46 470KΩ
C30 0.1uF/NC 16V
voltage detector,3.0V
TP3
Q3
VIC1121DI
R12 10KΩ
R13 470KΩ
#PGOOD_DET
SW3
MK12C02TG1.5
C5 4.7uF 10V
EN
U2
VIN
EN
SW
TPS62240DRV
FB
GND
MODE
GND2
GND1
GND3
GND4
SFD2D11LD-2R2, 2.2uH,0.78A
L2
R45 0Ω
TP5
R14 470KΩ,1%
R15 100KΩ,1%
C6 22pF 16V
C7 10uF 6.3V
C32 10uF 6.3V
Vout=0.6V*(1+R14/R15)
Iout: Max300mA

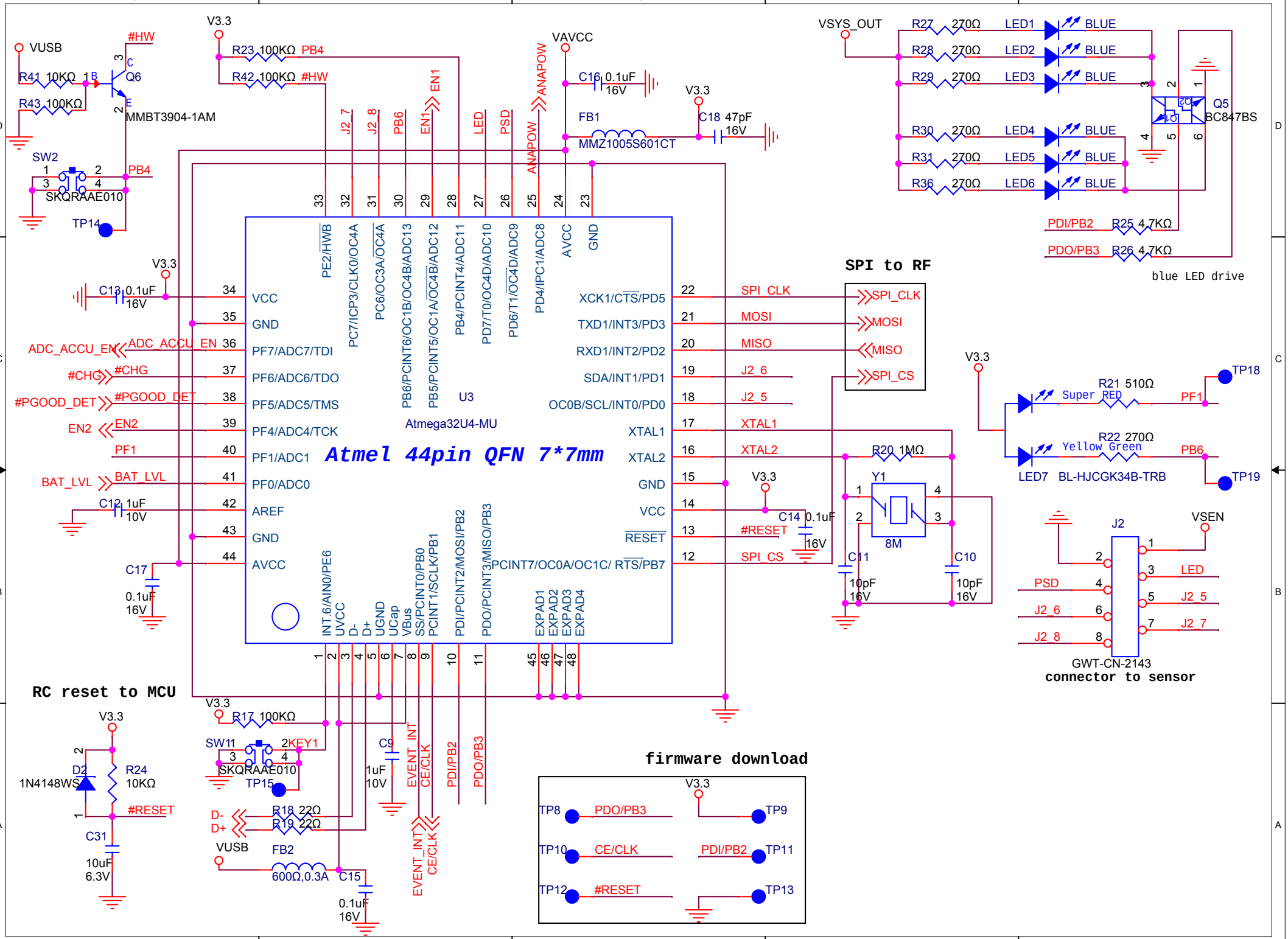
Atmel 44pin QFN 7*7mm
U3
Atmega32U4-MU
MMBT3904-1AM
Q6
SKQRAAE010
SW2
TP14
VUSB
#HW
R41 10KΩ
R43 100KΩ
R23 100KΩ PB4
R42 100KΩ #HW
V3.3
VAVCC
C16 0.1uF 16V
FB1
MMZ1005S601CT
C18 47pF 16V
ANAPOW
EN1
J2_7
J2_8
PB6
LED
PSD
VSYS_OUT
R27 270Ω LED1 BLUE
R28 270Ω LED2 BLUE
R29 270Ω LED3 BLUE
R30 270Ω LED4 BLUE
R31 270Ω LED5 BLUE
R36 270Ω LED6 BLUE
Q5 BC847BS
PDI/PB2 R25 4.7KΩ
PDO/PB3 R26 4.7KΩ
blue LED drive
SPI to RF
SPI_CLK
MOSI
MISO
SPI_CS
J2_6
J2_5
XTAL1
XTAL2
#RESET
ADC_ACCU_EN
#CHG
#PGOOD_DET
EN2
PF1
BAT_LVL
C13 0.1uF 16V
C12 1uF 10V
C17 0.1uF 16V
C14 0.1uF 16V
R20 1MΩ
Y1 8M
C11 10pF 16V
C10 10pF 16V
R21 510Ω Super RED
R22 270Ω Yellow Green
LED7 BL-HJCGK34B-TRB
TP18
TP19
PB6
J2
VSEN
GWT-CN-2143
connector to sensor
RC reset to MCU
D2 1N4148WS
R24 10KΩ
C31 10uF 6.3V
R17 100KΩ
SW11 SKQRAAE010
2KEY1
TP15
C9 1uF 10V
R18 22Ω
R19 22Ω
D-
D+
FB2 600Ω,0.3A
C15 0.1uF 16V
EVENT_INT
CE/CLK
firmware download
TP8 PDO/PB3
TP9
TP10 CE/CLK
PDI/PB2 TP11
TP12 #RESET
TP13

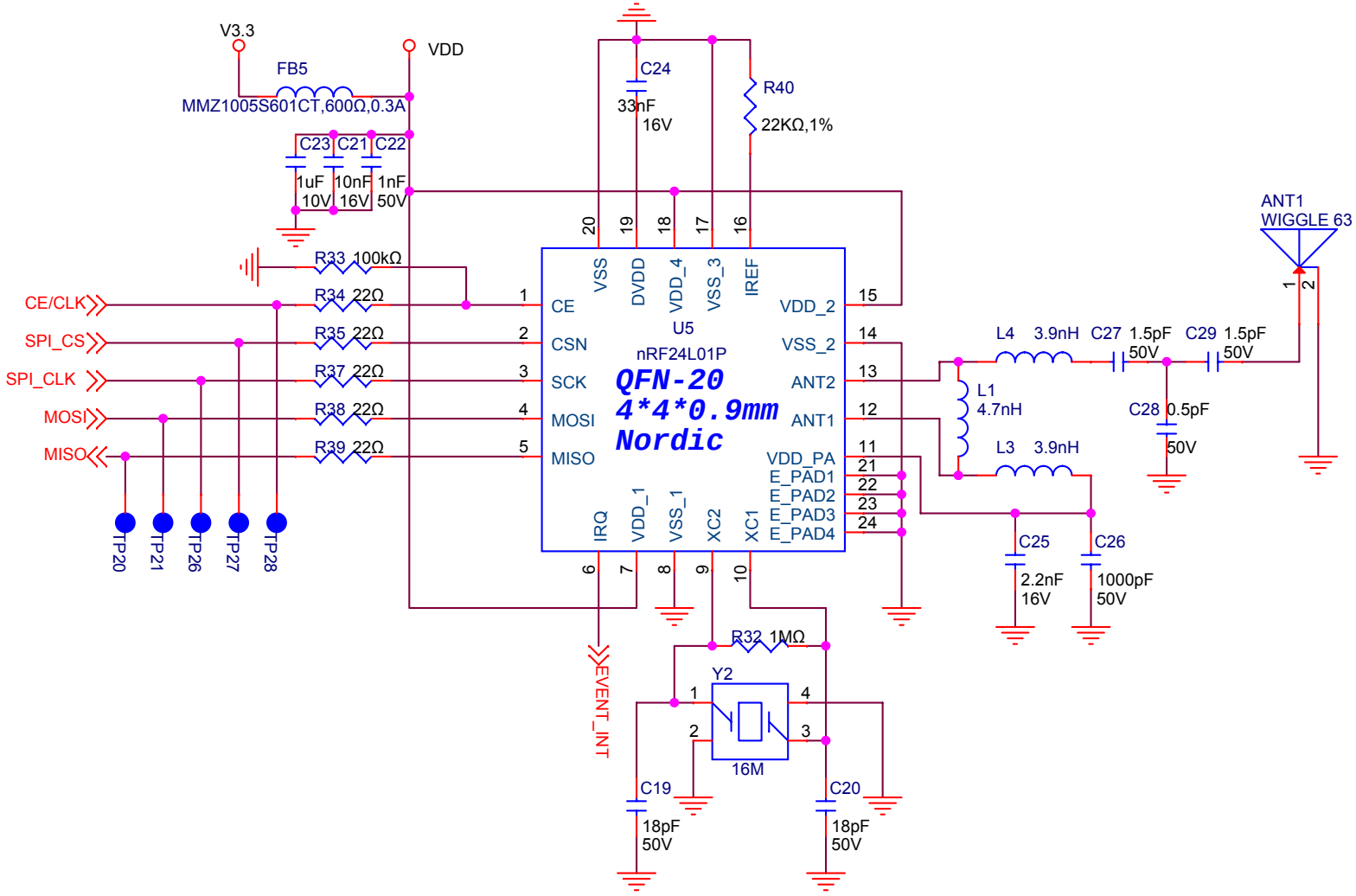
V3.3
VDD
FB5
MMZ1005S601CT,600Ω,0.3A
C23 C21 C22
1uF 10nF 1nF
10V 16V 50V
C24
33nF
16V
R40
22KΩ,1%
R33 100kΩ
CE/CLK
SPI_CS
SPI_CLK
MOSI
MISO
R34 22Ω
R35 22Ω
R37 22Ω
R38 22Ω
R39 22Ω
TP20
TP21
TP26
TP27
TP28
VSS
DVDD
VDD_4
VSS_3
IREF
CE
CSN
SCK
MOSI
MISO
U5
nRF24L01P
QFN-20
4*4*0.9mm
Nordic
VDD_2
VSS_2
ANT2
ANT1
VDD_PA
E_PAD1
E_PAD2
E_PAD3
E_PAD4
IRQ
VDD_1
VSS_1
XC2
XC1
EVENT_INT
R32 1MΩ
Y2
16M
C19
18pF
50V
C20
18pF
50V
ANT1
WIGGLE 63
L4 3.9nH
C27 1.5pF
50V
C29 1.5pF
50V
L1
4.7nH
C28 0.5pF
50V
L3 3.9nH
C25
2.2nF
16V
C26
1000pF
50V