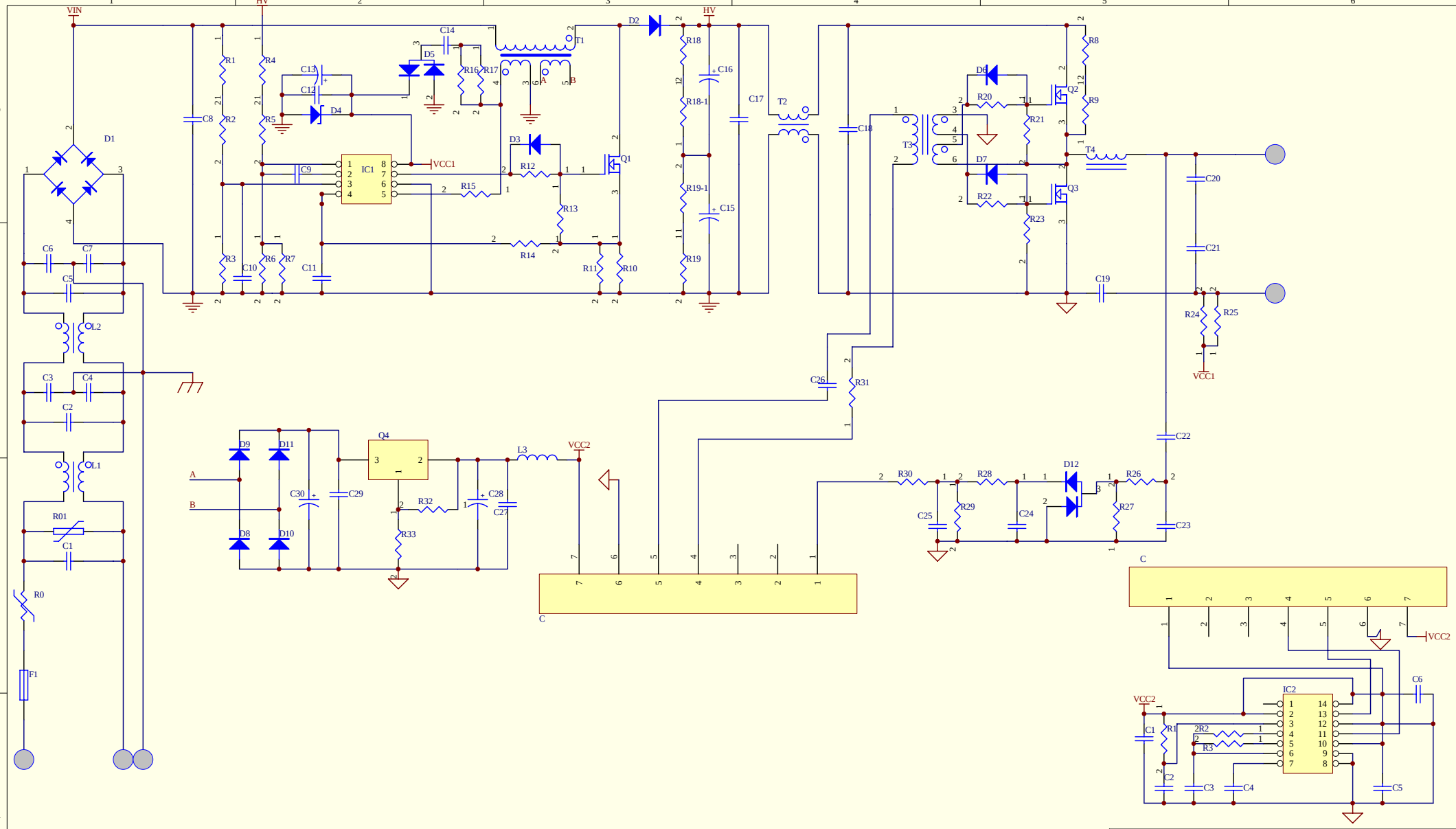

Title		
100W		
Size B	Number	Revision
Date: 29-Sep-2012	Sheet of	
	Drawn By:	