UD88E00-1V0	initial	20120117
	delet R3,R10,R11,R32,R40	20120210
	add C70,C71	
UD88E00-1V1	update ANT matching value , L5, C13	20120326

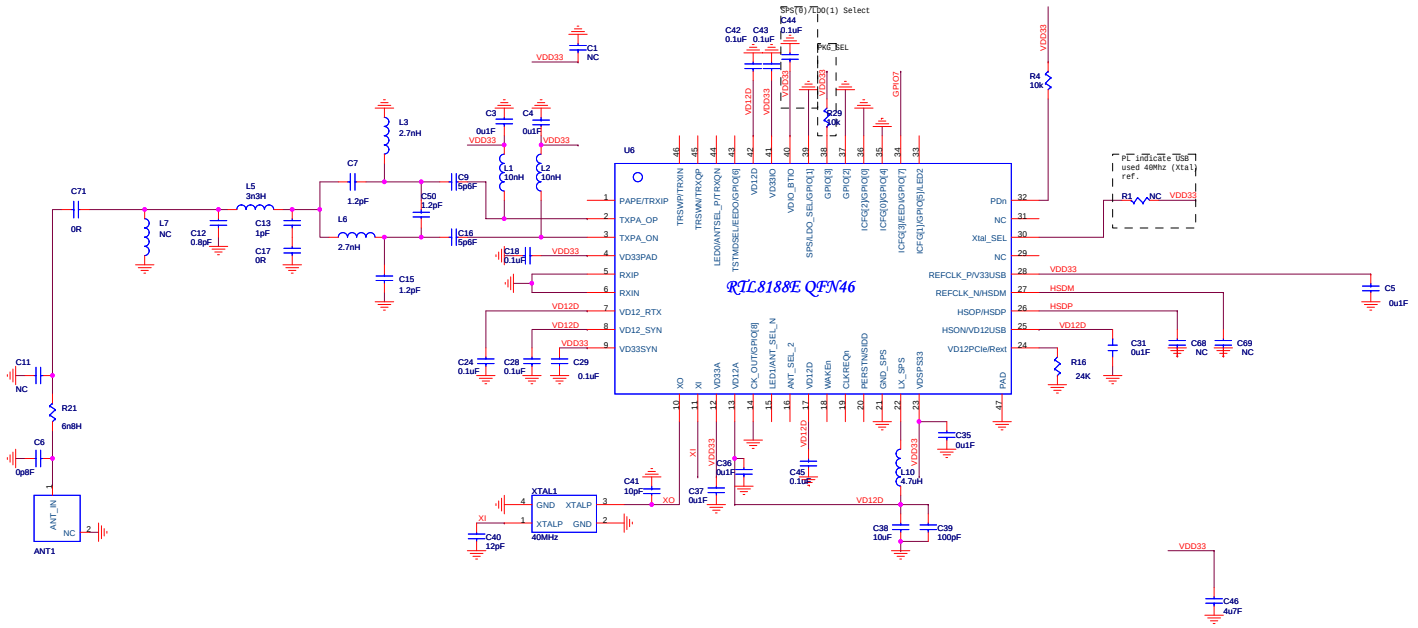

Title	UD88E00-1V0		
Size Custom	Document Number <Doc>		Rev 1V0
Date: Thursday, April 05, 2012	Sheet 1 of 1		