Block Diagram_RX

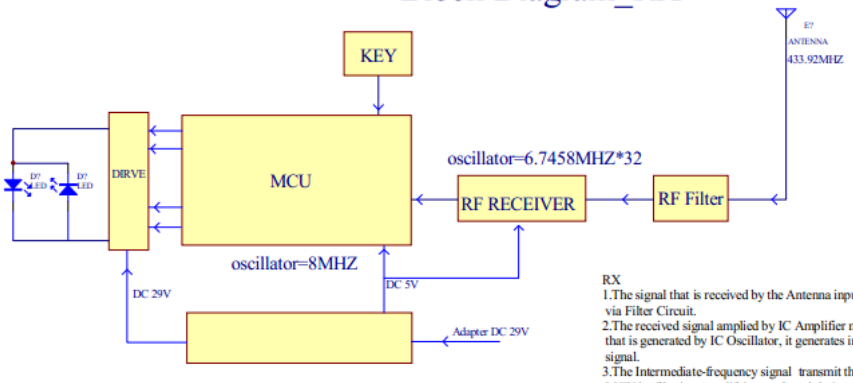

RX

1.The signal that is received by the Antenna input into The Receive IC via Filter Circuit.

2.The received signal amplied by IC Amplifier mix Oscillating signal that is generated by IC Oscillator, it generates intermediate-frequency signal.

3.The Intermediate-frequency signal transmit the coded signal to MCU by filtering, amplifying, and modulating.

4.The MCU judge and transmit according signal to the Drive. The Drive make the appropriate action.

5.The IC oscillating signal is composed of outer Crystal Oscillator, inner Oscillator and 64 Frequency Multiplier, 64*6.7458MHZ=431.7312MHZ.

Super Heterodyne

Title		
Size A4	Number	Revision
Date: 17-Jun-2013	Sheet of	
File: D:\PROGRAM FILES\DESIGN EXPLORER EXAMPLES\BLOCKD-13.DDB		