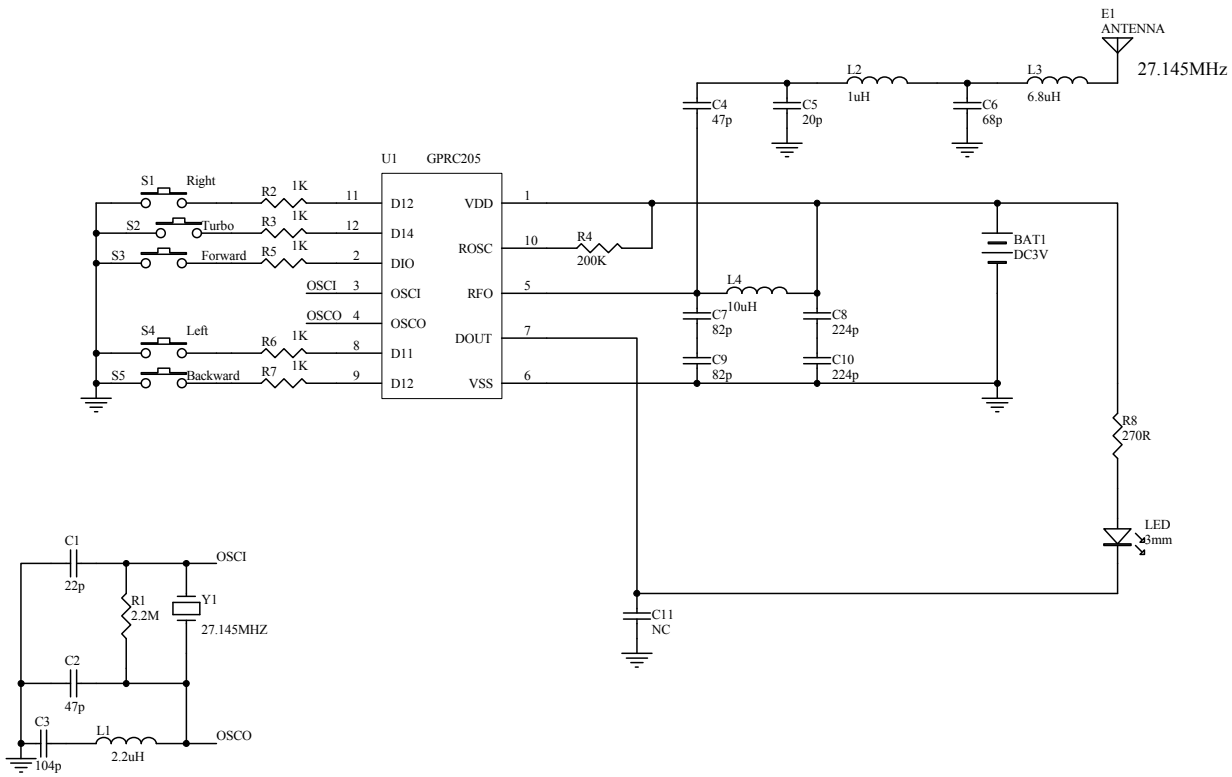

Title: 兴信胶五金电子玩具厂线路原理图			APPROVALS APPRD BY:
apellation: 遥控汽垫船	Number: TX	Rev: 0	CHKD BY: DRAWN BY: 苏汉征
File: E/开发文件/遥控汽垫船/设计图档		Date: 2012.8.17	Sheet: 1 of 1