27M

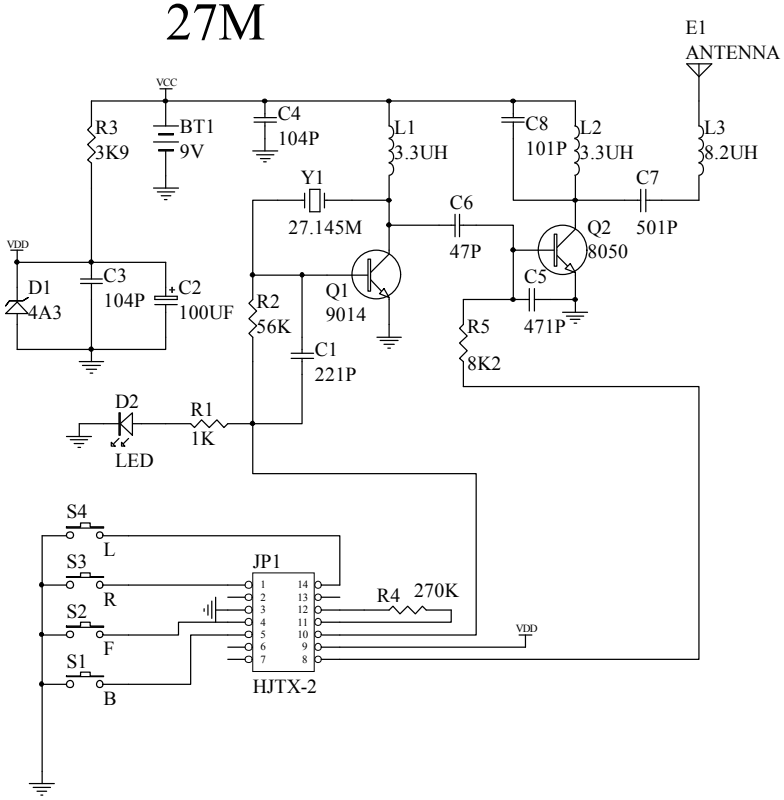

Title		
Size B	Number	Revision
Date: 23-Jul-2013		Sheet of
File: E:\街辉\客户\雄发\四通1 24\JH-C931.ddb		Drawn By: