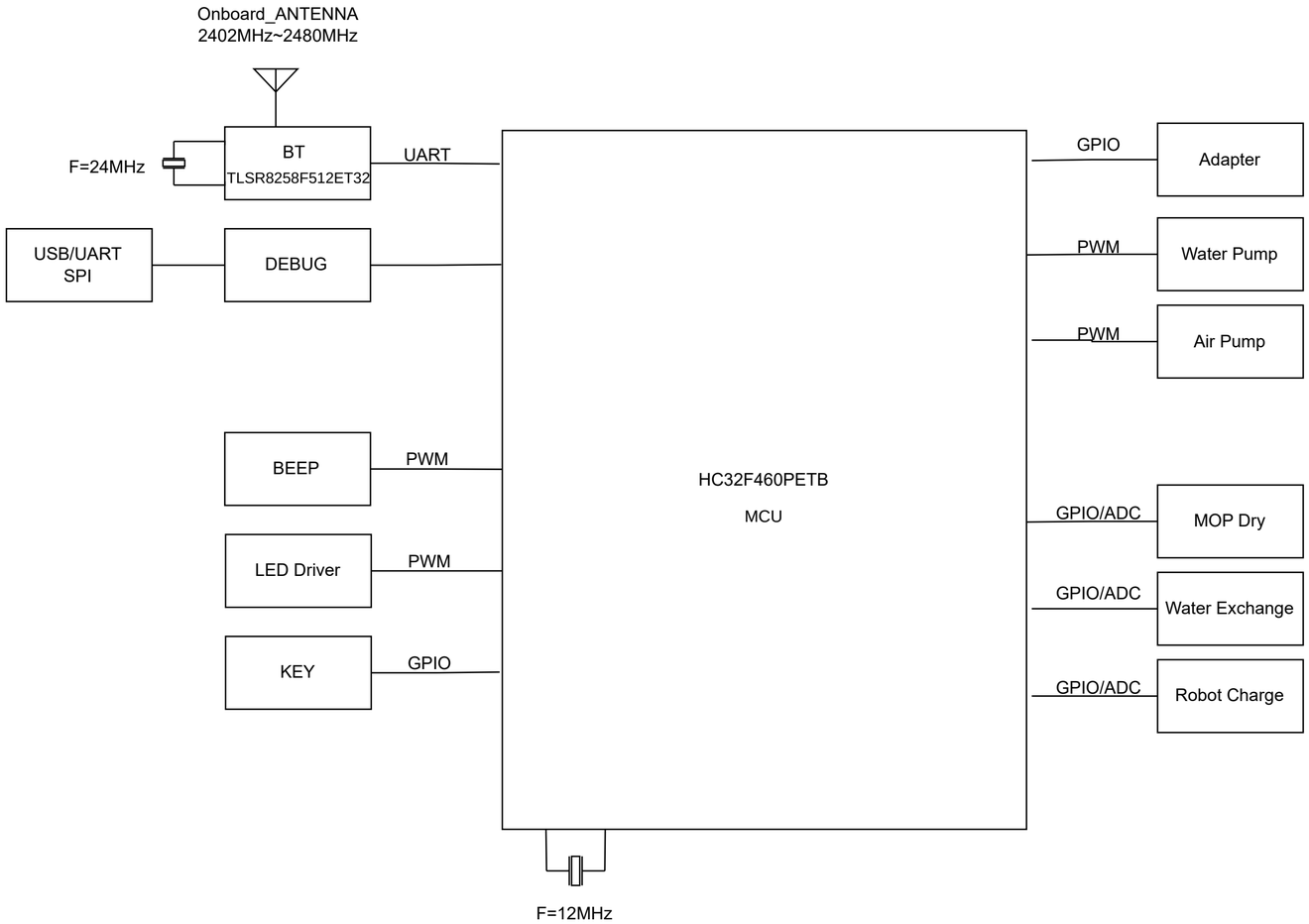
Onboard_ANTENNA
2402MHz~2480MHz
F=24MHz
BT
TLSR8258F512ET32
UART
USB/UART
SPI
DEBUG
BEEP
PWM
LED Driver
PWM
KEY
GPIO
HC32F460PETB
MCU
F=12MHz
GPIO
Adapter
PWM
Water Pump
PWM
Air Pump
GPIO/ADC
MOP Dry
GPIO/ADC
Water Exchange
GPIO/ADC
Robot Charge