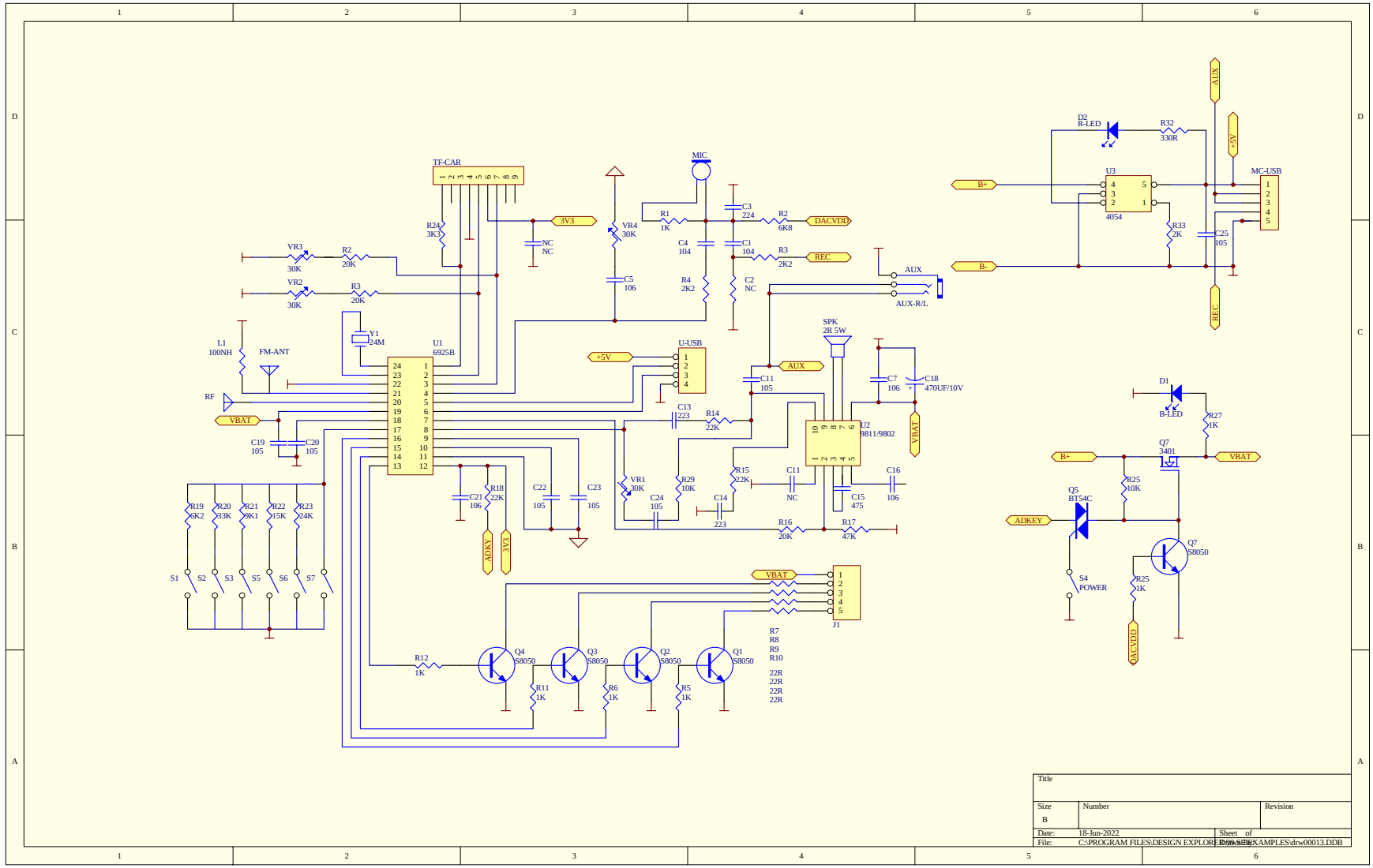

Title		
Size B	Number	Revision
Date: 18-Jun-2022	Sheet of	
File: C:\PROGRAM FILES\DESIGN EXPLORER 99SE\EXAMPLES\drw00013.DDB	Drawn By:	