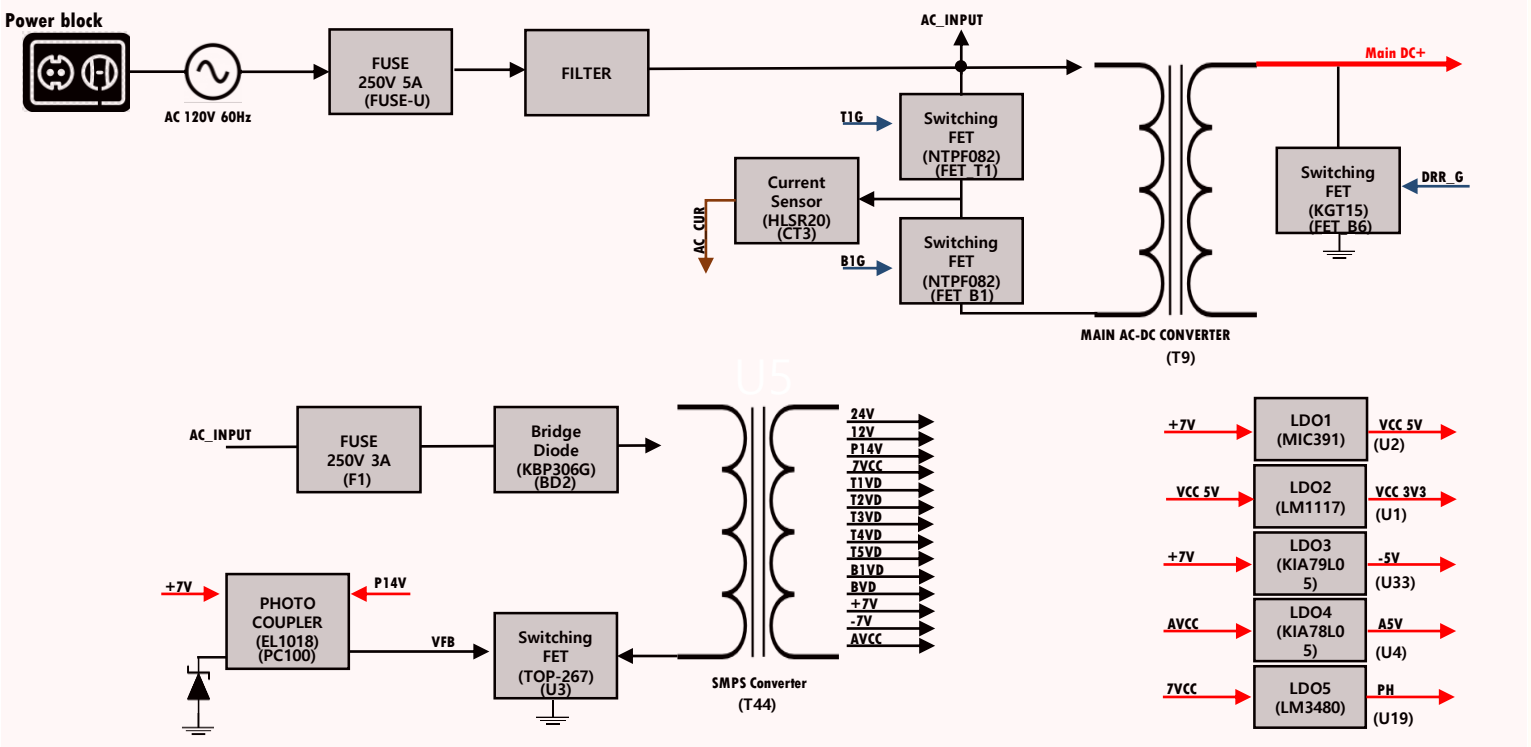
Power block
AC 120V 60Hz
FUSE 250V 5A (FUSE-U)
FILTER
AC_INPUT
Main DC+
T1G
Switching FET (NTPF082) (FET_T1)
Current Sensor (HLSR20) (CT3)
AC_CUR
B1G
Switching FET (NTPF082) (FET_B1)
Switching FET (KGT15) (FET_B6)
DRR_G
MAIN AC-DC CONVERTER (T9)
AC_INPUT
FUSE 250V 3A (F1)
Bridge Diode (KBP306G) (BD2)
24V
12V
P14V
7VCC
T1VD
T2VD
T3VD
T4VD
T5VD
B1VD
BVD
+7V
-7V
AVCC
+7V
PHOTO COUPLER (EL1018) (PC100)
P14V
VFB
Switching FET (TOP-267) (U3)
SMPS Converter (T44)
+7V
LDO1 (MIC391)
VCC 5V (U2)
VCC 5V
LDO2 (LM1117)
VCC 3V3 (U1)
+7V
LDO3 (KIA79L05)
-5V (U33)
AVCC
LDO4 (KIA78L05)
A5V (U4)
7VCC
LDO5 (LM3480)
PH (U19)

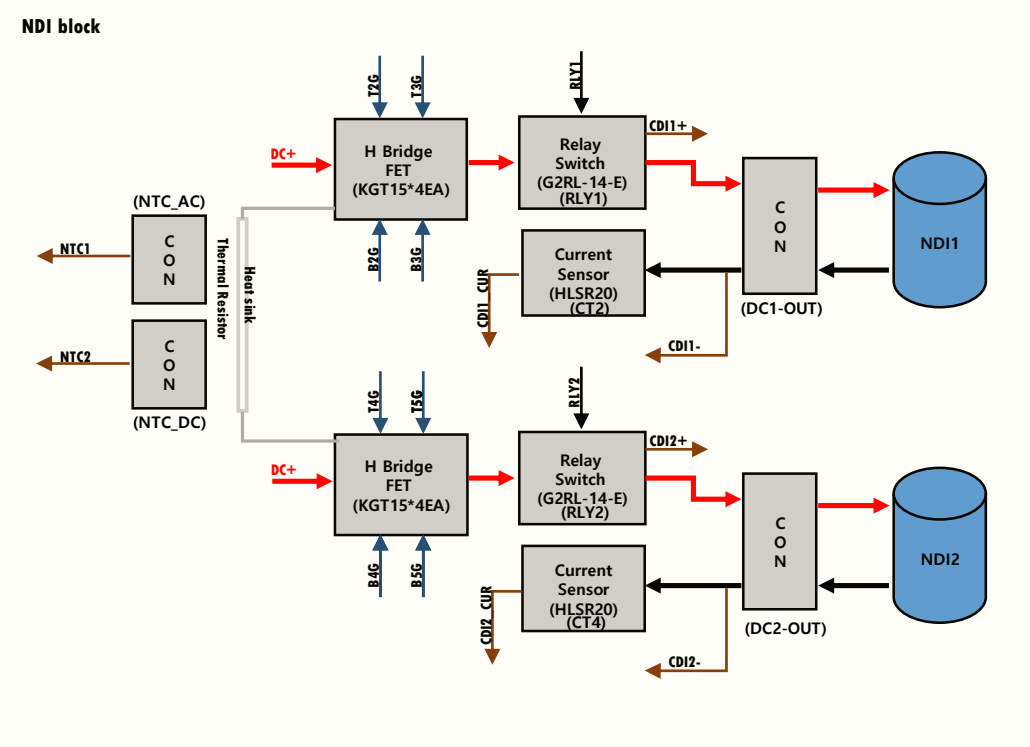
NDI block
T2G
T3G
RLY1
DC+
H Bridge FET (KGT15*4EA)
Relay Switch (G2RL-14-E) (RLY1)
CDI1+
(NTC_AC)
NTC1
CON
Thermal Resistor
Heat sink
B2G
B3G
Current Sensor (HLSR20) (CT2)
CDI1_CUR
CON
(DC1-OUT)
NDI1
NTC2
CON
(NTC_DC)
CDI1-
T4G
T5G
RLY2
DC+
H Bridge FET (KGT15*4EA)
Relay Switch (G2RL-14-E) (RLY2)
CDI2+
B4G
B5G
Current Sensor (HLSR20) (CT4)
CDI2_CUR
CON
(DC2-OUT)
NDI2
CDI2-

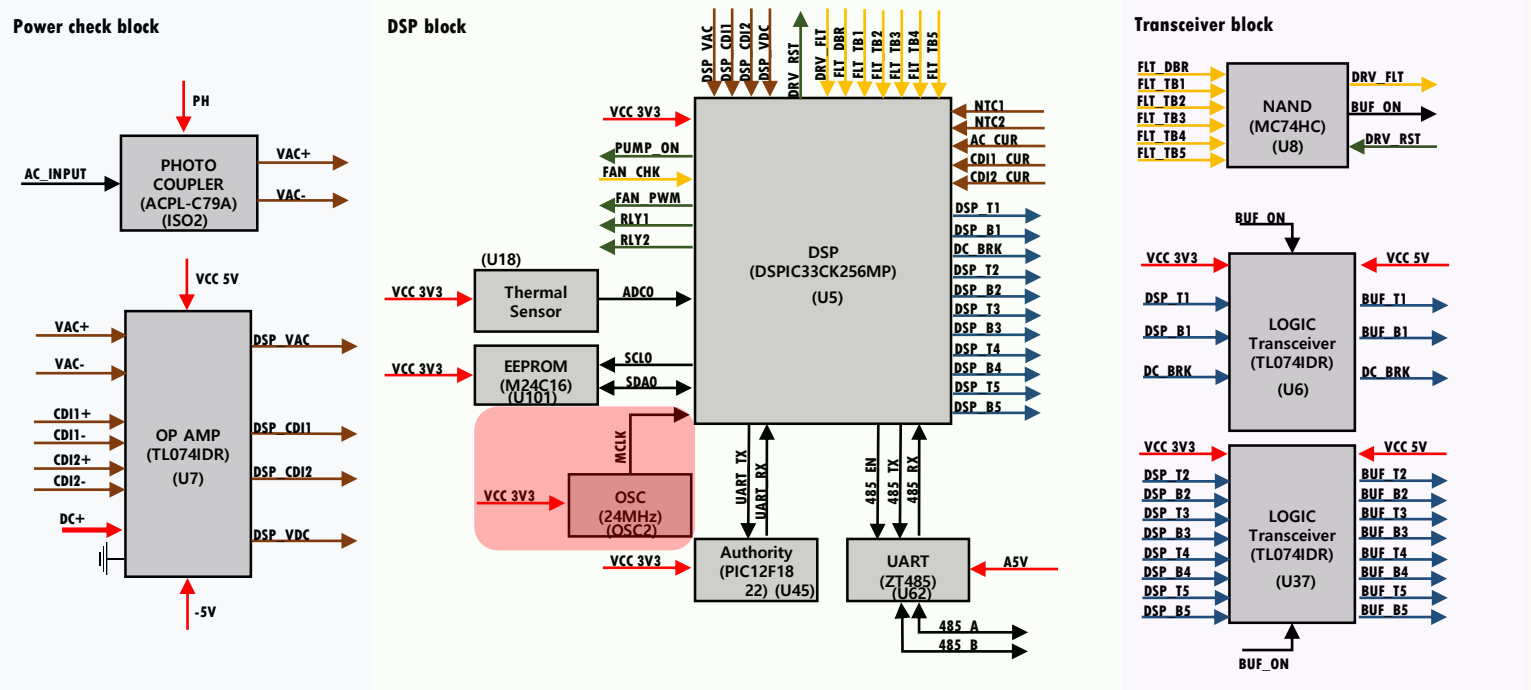
Power check block
PH
AC_INPUT
PHOTO COUPLER (ACPL-C79A) (ISO2)
VAC+
VAC-
VCC 5V
VAC+
VAC-
CDI1+
CDI1-
CDI2+
CDI2-
DC+
OP AMP (TL074IDR) (U7)
DSP_VAC
DSP_CDI1
DSP_CDI2
DSP_VDC
-5V
DSP block
DSP_VAC
DSP_CDI1
DSP_CDI2
DSP_VDC
DRV_RST
DRV_FLT
FLT_DBR
FLT_TB1
FLT_TB2
FLT_TB3
FLT_TB4
FLT_TB5
VCC 3V3
PUMP_ON
FAN_CHK
FAN_PWM
RLY1
RLY2
NTC1
NTC2
AC_CUR
CDI1_CUR
CDI2_CUR
DSP_T1
DSP_B1
DC_BRK
DSP_T2
DSP_B2
DSP_T3
DSP_B3
DSP_T4
DSP_B4
DSP_T5
DSP_B5
DSP (DSPIC33CK256MP) (U5)
(U18)
VCC 3V3
Thermal Sensor
ADC0
VCC 3V3
EEPROM (M24C16) (U101)
SCL0
SDA0
MCLK
VCC 3V3
OSC (24MHz) (OSC2)
UART_TX
UART_RX
485_EN
485_TX
485_RX
VCC 3V3
Authority (PIC12F1822) (U45)
UART (ZT485) (U62)
A5V
485_A
485_B
Transceiver block
FLT_DBR
FLT_TB1
FLT_TB2
FLT_TB3
FLT_TB4
FLT_TB5
NAND (MC74HC) (U8)
DRV_FLT
BUF_ON
DRV_RST
BUF_ON
VCC 3V3
DSP_T1
DSP_B1
DC_BRK
LOGIC Transceiver (TL074IDR) (U6)
VCC 5V
BUF_T1
BUF_B1
DC_BRK
VCC 3V3
DSP_T2
DSP_B2
DSP_T3
DSP_B3
DSP_T4
DSP_B4
DSP_T5
DSP_B5
LOGIC Transceiver (TL074IDR) (U37)
VCC 5V
BUF_T2
BUF_B2
BUF_T3
BUF_B3
BUF_T4
BUF_B4
BUF_T5
BUF_B5
BUF_ON
Switch block
VCC 5V
BUF_T1
PHOTO COUPLER (TLP5702)
T1G (PC-T1)
VCC 5V
BUF_T2
PHOTO COUPLER (TLP5702)
T2G (PC-T2)
VCC 5V
BUF_T3
PHOTO COUPLER (TLP5702)
T3G (PC-T3)
VCC 5V
BUF_T4
PHOTO COUPLER (TLP5702)
T4G (PC-T4)
VCC 5V
BUF_T5
PHOTO COUPLER (TLP5702)
T5G (PC-T5)
VCC 5V
FLT_DBR
DC_BRK
PHOTO COUPLER (ACPL-332)
DRR_G (PC_B6)
VCC 5V
FLT_TB1
BUF_B1
PHOTO COUPLER (ACPL-332)
B1G (PC_B1)
VCC 5V
FLT_TB2
BUF_B2
PHOTO COUPLER (ACPL-332)
B2G (PC_B2)
VCC 5V
FLT_TB3
BUF_B3
PHOTO COUPLER (ACPL-332)
B3G (PC_B3)
VCC 5V
FLT_TB4
BUF_B4
PHOTO COUPLER (ACPL-332)
B4G (PC_B4)
VCC 5V
FLT_TB5
BUF_B5
PHOTO COUPLER (ACPL-332)
B5G (PC_B5)
PUMP_ON
AC_INPUT
PUMP Switch Circuit
CON (PUMP)
To PUMP
24V
12V
485_A
485_B
CON (CN2)
To MAIN B/D
24V
FAN_CHK
FAN_PWM
CON (FAN)
To FAN
Contents
Voltage Line
Switch Control Line
ADC Feedback Line
Logic control Line
Logic Feedback Line