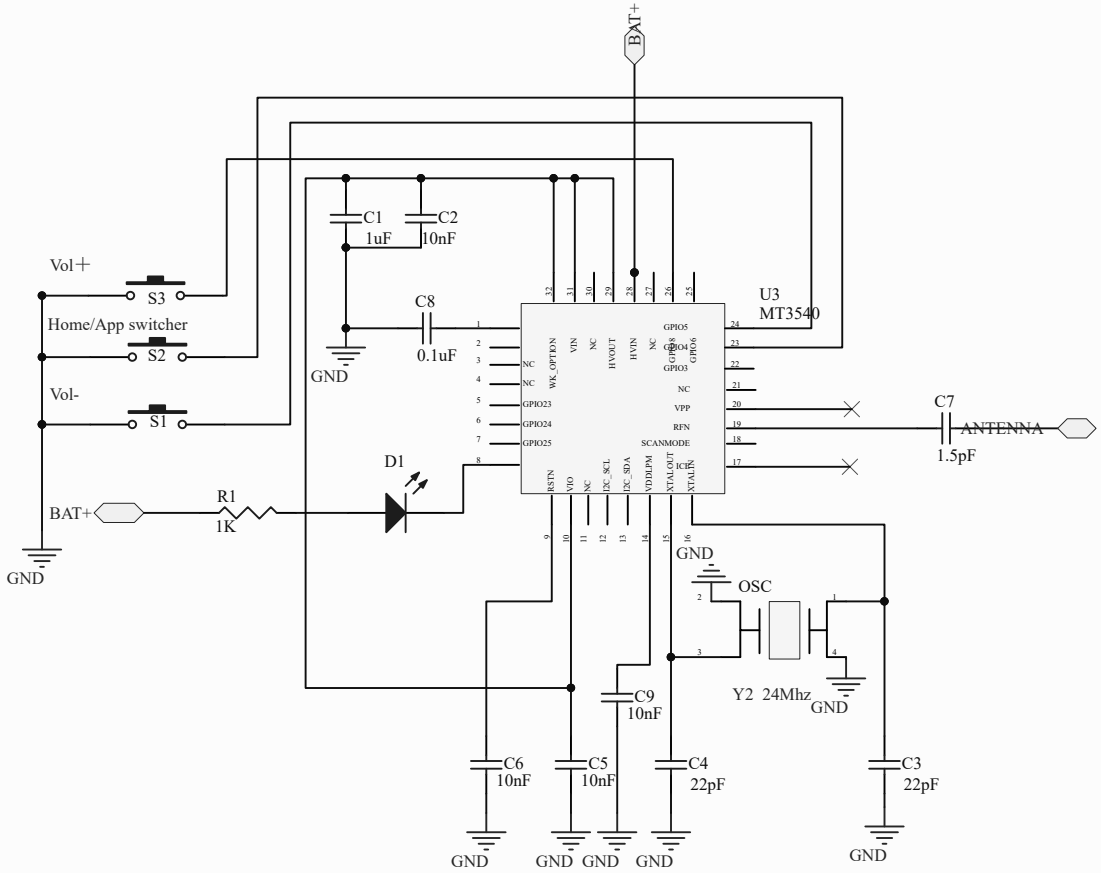

Title		
Size A4	Number	Revision
Date: 2022-04-18		Sheet of
File: C:\Users\..\Bluetooth Module.SchDoc		Drawn By:

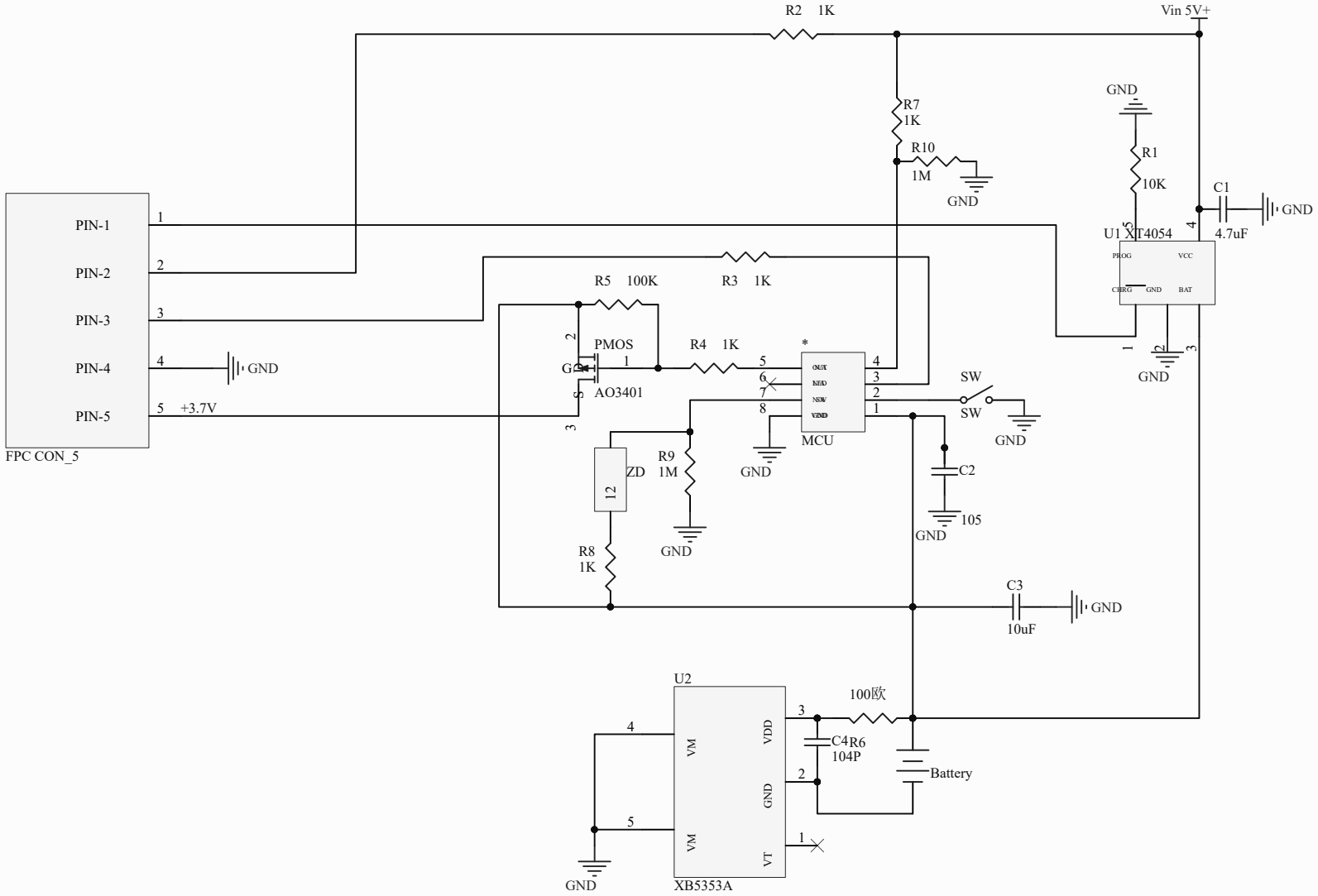

Title		
Size A4	Number	Revision
Date: 2022-04-18		Sheet of
File: C:\Users\..\Power module.SchDoc		Drawn By: