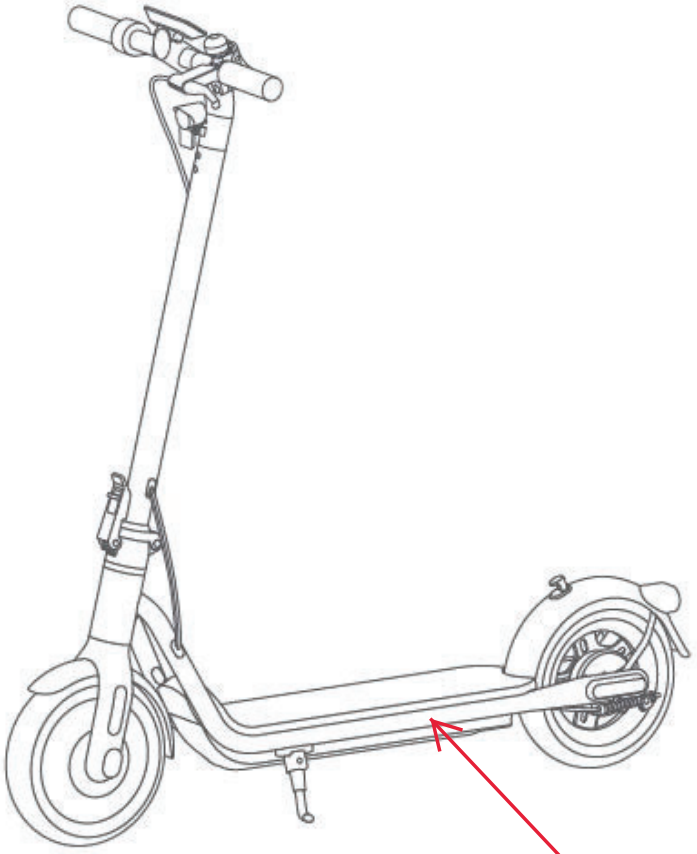

220mm

R2

35mm

NAVEE Electric Scooter

Model/Modèle: V25i-U SPU: V25i Net Weight/Poids net: 37.7 lbs (17.1 kg) Designation/Désignation: PLEV Max. Speed/Vitesse max.: 19 mph (30 km/h) Max. Load/Charge max.: 220.5 lbs (100 kg)
Motor Rated Power/Puissance nominale du moteur: 300 W (0.3 kW) Rated Energy/Énergie nominale: 183.6 Wh IP Rating/Indice IP: IPX5 Rated Voltage/Tension Nominale: 36 Vdc
Max. Input Voltage/Tension d'entrée max.: 42.0 V Rated Input/Entrée nominale: 41.0 Vdc 1.3 A CAN ICES-3(B)/NMB-3(B) HVIN: V1.1.10 FCC ID: 2A4GZ-V254050U IC: 28570-V254050U
Made in China/Fabriqué en Chine Brightway Innovation Intelligent Technology (Suzhou) Co., Ltd. Factory ID/Usine ID : Huzhou
Address/Adresse: Building A2, Shangjinwan Headquarters Economic Park, No.2288, Wuzhong Avenue, Wuzhong Economic Development Zone, Suzhou Jiangsu P.R. China
This device complies with part 15 of the FCC Rules. Operation is subject to the following two conditions:
(1) This device may not cause harmful interference, and (2) this device must accept any interference received,including interference that may cause undesired operation.
Store Indoors When Not in Use./Rangez le scooter à l'intérieur lorsqu'il n'est pas utilisé.

WARNING- To reduce the risk of injury,user must read instruction manual.
AVERTISSEMENT- Pour déduire le risque de blessure, l'utilisateur doit lire la notice d'instruction.

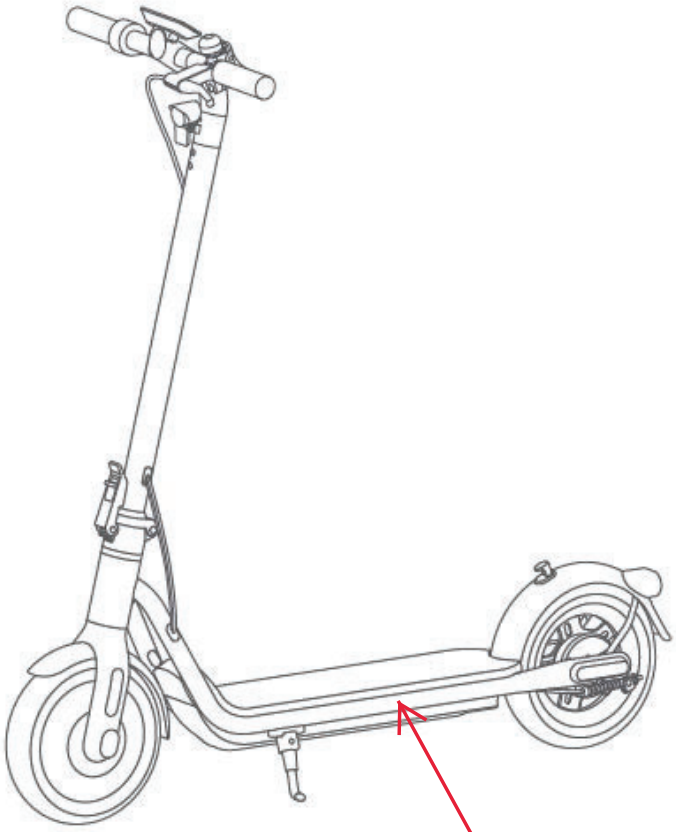

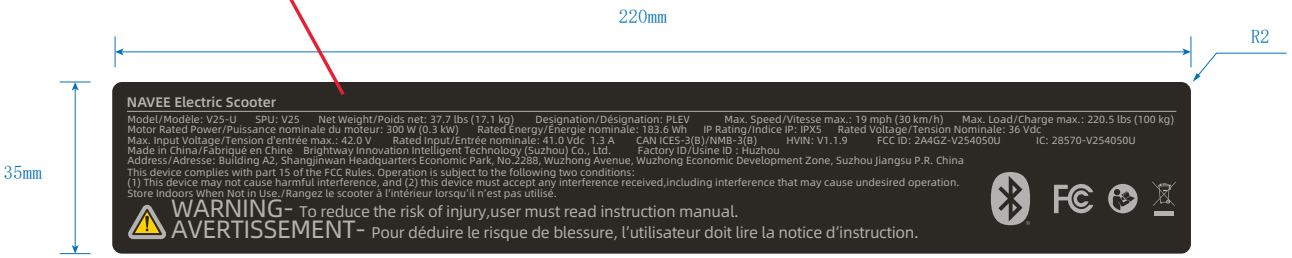
220mm
R2
35mm
NAVEE Electric Scooter
Model/Modèle: V25-U SPU: V25 Net Weight/Poids net: 37.7 lbs (17.1 kg) Designation/Désignation: PLEV Max. Speed/Vitesse max.: 19 mph (30 km/h) Max. Load/Charge max.: 220.5 lbs (100 kg)
Motor Rated Power/Puissance nominale du moteur: 300 W (0.3 kW) Rated Energy/Energie nominale: 183.6 Wh IP Rating/Indice IP: IPX5 Rated Voltage/Tension Nominale: 36 Vdc
Max. Input Voltage/Tension d'entrée max.: 42.0 V Rated Input/Entrée nominale: 41.0 Vdc 1.3 A CAN ICES-3(B)/NMB-3(B) HVIN: V1.1.9 FCC ID: 2A4GZ-V254050U IC: 28570-V254050U
Made in China/Fabriqué en Chine Brightway Innovation Intelligent Technology (Suzhou) Co., Ltd. Factory ID/Usine ID : Huzhou
Address/Adresse: Building A2, Shangjinwan Headquarters Economic Park, No.2288, Wuzhong Avenue, Wuzhong Economic Development Zone, Suzhou Jiangsu P.R. China
This device complies with part 15 of the FCC Rules. Operation is subject to the following two conditions:
(1) This device may not cause harmful interference, and (2) this device must accept any interference received,including interference that may cause undesired operation.
Store Indoors When Not in Use./Rangez le scooter à l'intérieur lorsqu'il n'est pas utilisé.
WARNING- To reduce the risk of injury,user must read instruction manual.
AVERTISSEMENT- Pour déduire le risque de blessure, l'utilisateur doit lire la notice d'instruction.

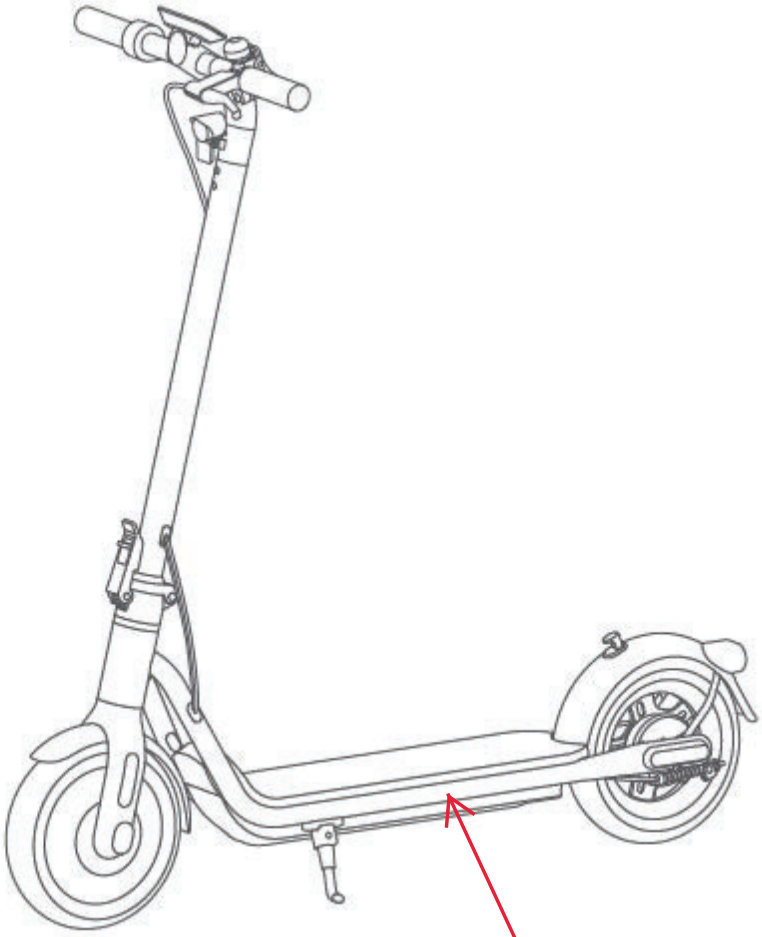

220mm

R2

35mm

NAVEE Electric Scooter

Model/Modèle: V40i-U SPU: V40i Net Weight/Poids net: 39.0 lbs (17.7 kg) Designation/Désignation: PLEV Max. Load/Charge max.: 264.6 lbs (120 kg) IP Rating/Indice IP: IPX5
Motor Rated Power/Puissance nominale du moteur: 350 W (0.35 kW) Rated Energy/Energie nominale: 275.4 Wh Max. Speed/Vitesse max.: 20 mph (32 km/h) CAN ICES-3(B)/NMB-3(B)
Rated Voltage/Tension Nominale: 36 Vdc Max. Input Voltage/Tension d'entrée max.: 42.0 Vdc Rated Input/Entrée nominale: 41.0 Vdc 1.3 A Factory ID/Usine ID : Huzhou
Brightway Innovation Intelligent Technology (Suzhou) Co., Ltd. FCC ID: 2A4GZ-V254050U IC: 28570-V254050U HVIN: V1.1.11 Made in China/Fabriqué en Chine
Address/Adresse: Building A2, Shangjinwan Headquarters Economic Park, No.2288, Wuzhong Avenue, Wuzhong Economic Development Zone, Suzhou Jiangsu P.R. China
This device complies with part 15 of the FCC Rules. Operation is subject to the following two conditions:
(1) This device may not cause harmful interference, and (2) this device must accept any interference received,including interference that may cause undesired operation.
Store Indoors When Not in Use./Rangez le scooter à l'intérieur lorsqu'il n'est pas utilisé.

WARNING- To reduce the risk of injury,user must read instruction manual.
AVERTISSEMENT- Pour déduire le risque de blessure, l'utilisateur doit lire la notice d'instruction.

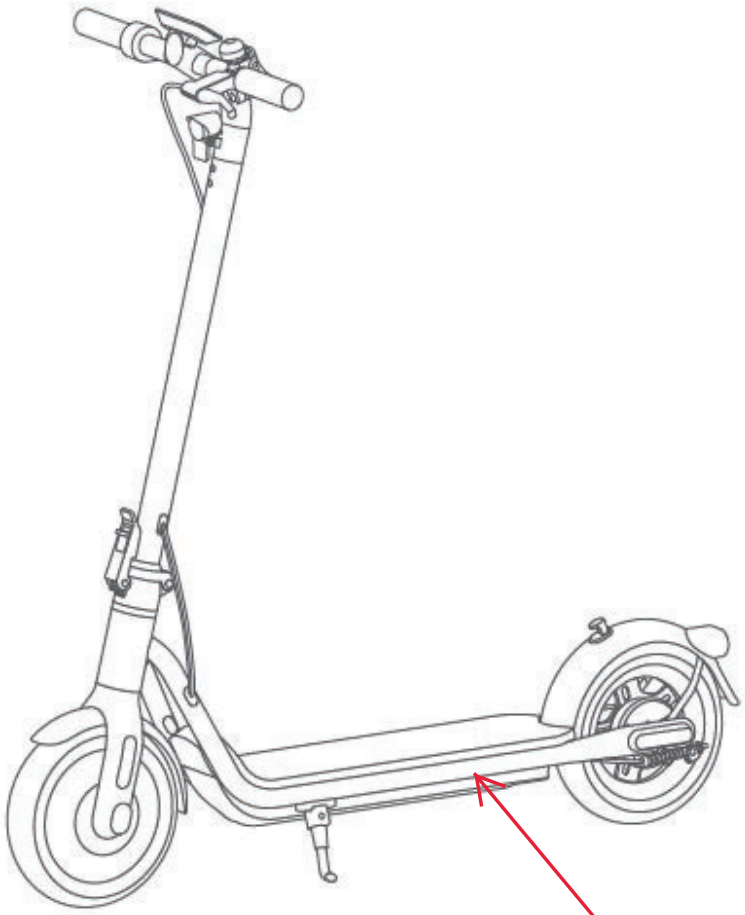

220mm

R2

35mm

NAVEE Electric Scooter

Model/Modèle: V50i-U SPU: V50i Pro Net Weight/Poids net: 40.3 lbs (18.3 kg) Designation/Désignation: PLEV Max. Load/Charge max.: 264.6 lbs (120 kg) IP Rating/Indice IP: IPX5
Motor Rated Power/Puissance nominale du moteur: 350 W (0.35 kW) Rated Energy/Energie nominale: 367.2 Wh Max. Speed/Vitesse max.: 19.9 mph (32 km/h) CAN ICES-3(B)/NMB-3(B)
Rated Voltage/Tension Nominale: 36 Vdc Max. Input Voltage/Tension d'entrée max.: 42.0 Vdc Rated Input/Entrée nominale: 41.0 Vdc 1.3 A Factory ID/Usine ID : Huzhou
Brightway Innovation Intelligent Technology (Suzhou) Co., Ltd. FCC ID: 2A4GZ-V254050U IC: 28570-V254050U HVIN: V1.1.12 Made in China/Fabriqué en Chine
Address/Adresse: Building A2, Shangjinwan Headquarters Economic Park, No.2288, Wuzhong Avenue, Wuzhong Economic Development Zone, Suzhou Jiangsu P.R. China
This device complies with part 15 of the FCC Rules. Operation is subject to the following two conditions:
(1) This device may not cause harmful interference, and (2) this device must accept any interference received,including interference that may cause undesired operation.
Store Indoors When Not in Use./Rangez le scooter à l'intérieur lorsqu'il n'est pas utilisé.

WARNING- To reduce the risk of injury,user must read instruction manual.
AVERTISSEMENT- Pour déduire le risque de blessure, l'utilisateur doit lire la notice d'instruction.