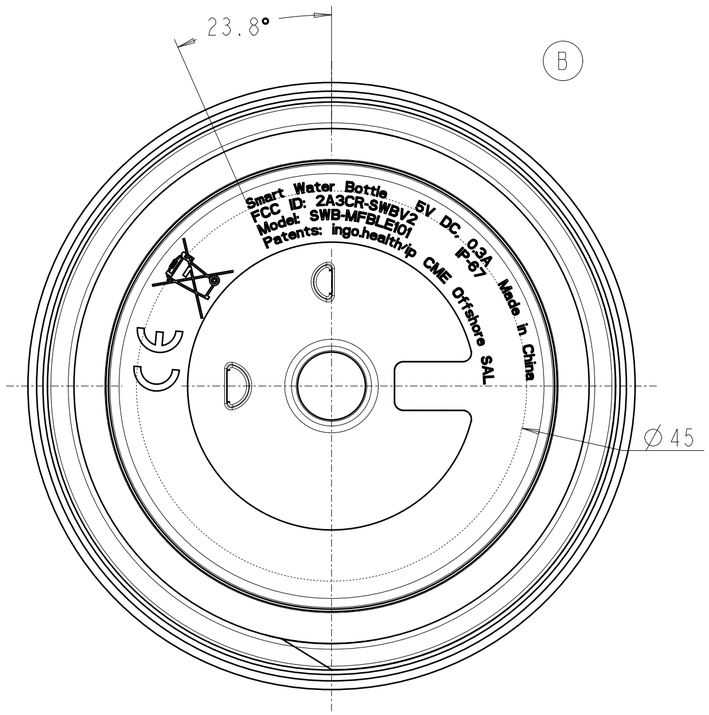

ISO VIEW

ZONE	IDX	AMENDMENTS	SPRT DOC	DATE	NAME
N/A	00A	DRAWING ISSUED	N/A	Sep-09-24	S.CHEMALY
6F	01B	ADDED FCC ID	N/A	Dec-13-24	S.CHEMALY

	DATE	NAME	SCALE: 2:1	DIMENSIONS ARE IN mm
DWN BY:	Sep-09-24	S.CHEMALY		
CHK BY:	Dec-13-24	S.CHEMALY	MATL NO: N/A	TOOL SERNO: N/A
APVD BY:	Dec-13-24	S.CHEMALY	MATL DESCP: SEE NOTES	
FREE TOLERANCE		±0.1	SURFACE FINISH: SEE NOTES	
		∠± 0.5°	MASS: N/A	SURFACE AREA: N/A

TITLE:

SWB V2 LABEL

DWG REPL: N/A

DWG NO: XXXX-01B

CAD FILE NAME: LABEL

SHEET NO: 1 OF 1

ALL RIGHTS RESERVED

THE INFORMATION DISCLOSED IN THIS DOCUMENT IS PROPRIETARY TO CME AND MAY NOT BE USED FOR MANUFACTURE OR ANY OTHER PURPOSE WITHOUT THE WRITTEN CONSENT OF CME.

DENOTES CHECKING CHARACTERISTIC

ANY DISCREPANCIES BETWEEN THE DRAWING AND THE ASSOCIATED MODEL WHEN SUPPLIED TO BE DISCUSSED CLIFTON MYERS ENTERPRISES

CLIFTON MYERS ENTERPRISES

A2